Actuator range



The SKF® brand now stands for more than ever before, and means more to you as a valued customer.

While SKF maintains its leadership as the hallmark of quality bearings throughout the world, new dimensions in technical advances, product support and services have evolved SKF into a truly solutions-oriented supplier, creating greater value for customers.

These solutions encompass ways to bring greater productivity to customers, not only with breakthrough application-specific products, but also through leading-edge design simulation tools and consultancy services, plant asset efficiency maintenance programmes, and the industry's most advanced supply management techniques.

The SKF brand still stands for the very best in rolling bearings, but it now stands for much more.

SKF – the knowledge engineering company

Content

3 Actuation Systems
4 Selection guide

Standard range

17 Telescopic pillars
18 Telemag
26 TMS
29 Telesmart
33 Maggear
35 Linear actuators
35 CAT
46 CAP
52 CAR
58 Magforce
70 Ecomag
72 ILD
74 CALA36A
76 Matrix
82 CARE33
84 Runner
86 Magpush
90 Magtop
98 Varimag
104 Magrack
110 Magdrive
112 MD4
114 FD
116 LD4
118 LD6
120 M
122 IMD3
124 ID8A
126 ID8B
128 IA4A
130 IA4B
132 SJ
140 Rotary actuators
145 Control units
146 KOM
150 MCU
151 LD
152 SEM
153 CAEN
154 CAEV
154 CAED ANR
155 CAED
155 CAEP
156 CAEL
156 BCU
158 SCU
160 VCU
162 CB 200/300/800
167 Hand switches
168 EHA
171 IHA1
172 EHE
174 PHC
174 CAES
175 HS
180 Foot switches
181 ST
182 PFP
184 Desk switches
185 ST
186 LD
187 CAFHT
187 PAM
189 Easy3, plug & play systems
192 Guiding tube sets FRE

Customized projects only

194 Linear drive profile CAWA
195 Rotary actuators
196 ServoMove systems
197 CEMC actuator series
198 SRSA actuator series
199 Spare parts
207 Glossary and definitions

Actuation Systems







About Actuation Systems
Linear drive applications often require superior performance from the actuator. They must exhibit this in terms of speed, temperature stability, accuracy and noise levels. SKF produces a large range of actuator products designed to satisfy the most demanding requirements. The assortment includes telescopic pillars, linear and rotary actuators as well as control units, providing a total system solution for various applications. SKF holds a leading position in the industrial field where actuators are used in many different applications. SKF supplies a wide range of actuators but also offers extensive knowledge and experience in application engineering. This background has developed through long standing cooperation with leading companies in many industrial sectors.

Selecting actuators, made easy
Finding the right electric actuator for an application usually requires knowing many application details and making several calculations. However, there are ways to narrow the selection to one or two safe approximations first. Using the selection guide, on following pages 4-16 you may easily find those actuators that meet your first criteria of load and speed as well as basic information about available controls and operating devices. This is normally the most important first step to carry out. On pages 17-206 you will find detailed information and type keys of the individual product(s). In case you need more explanation on technical terminology (glossary) and important considerations in selecting the right actuator for your applications, pages 207-209 may be useful. Some of our product families are only available for project sales. On pages 194-198, in the selection guide, you will find brief information about those products. In addition to this "Actuator range" catalogue we have all product brochures available as pdf documents on the internet.
www.linearmotion.skf.com/doc

EasyRange, fast delivery service
All products, up to 10 pcs, defined as EasyRange can be dispatched within 5 working days from order entry. Some products, such as motors and accessories, can be delivered even the next day. Products defined for this range are highlighted in respective type keys and all the possible options are written in BLUE TEXT.

Type keys
Options written in italic fonts are not available as standard. Please contact SKF for verification.

Selection guide

Telescopic pillars	Type	Max. force push	Max. force pull	Max. speed no load	Max. speed full load	Stroke (S)	Features	Page
		N	N	mm/s	mm/s	mm		No.
TELEMAG 	TFG	2 500	2 500	19	15	200-400	Compact	18
	TGC	1 000	1 000	11	9	200-700	Robust	20
	THC	1 800	1 800	15	12	200-700	Robust	21
	THG	2 000	0	15	12	200-700	Robust	22
	TLC	4 000	4 000	16	11	100-700	Robust	23
	TLG	4 000	0	33	25	200-700	Robust	24
	TLT	4 000	0	42	25	300-700	Compact	25
TMS 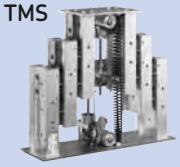	EASY	4 000	0	28	16	250-700	For eccentric loads	26
	MECH	4 000	0	–	–	250-700	For eccentric loads	26
TELESMART 	TMD	800	0	60	35	700	Slim & stylish	30
	TMA	1 000	0	55	35	500	Slim & stylish	31
	TXG	1 500	0	23	17	200-600	Plug & play	32
MAGGEAR 	ETE	800	200	8	8	200	In-line	33

Linear actuators	Type	Max. force push	Max. force pull	Max. speed no load	Max. speed full load	Stroke (S)	Features	Page
		N	N	mm/s	mm/s	mm		No.
CAT 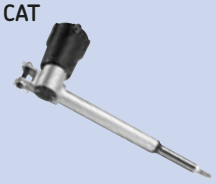	CAT 33H	1 200	1 200	174	150	100-400	Flexible, modular	36
	CAT 33	3 000	3 000	48	38	100-400	Flexible, modular	38
	CAT 32B	4 000	4 000	67	50	50-700	Flexible, modular	40
	CAT 21B	600	600	10	5	50-300	Compact	44
CAP 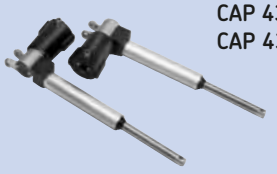	CAP 32	3 500	3 500	60	40	50-700	High duty factor	47
	CAP 43A	3 000	3 000	48	35	100-400	Positioning	48
	CAP 43B	4 000	4 000	65	50	50-700	Positioning	49

Selection guide

Linear actuators	Type	Max. force push	pull	Max. speed no load	full load	Stroke (S)	Features	Page
		N	N	mm/s	mm/s	mm		No.
CAR 	CAR 22	1 500	1 500	30	20	50-300	High duty factor	53
	CAR 32	3 500	3 500	60	40	50-700	High duty factor	54
	CAR 40	6 000	6 000	60	40	100-700	High duty factor	55
	CARN 32	3 500	3 500	N/A	N/A	50-700	No motor	56
	CCBR 32	2 500	2 500	N/A	N/A	50-700	No motor	57
MAGFORCE 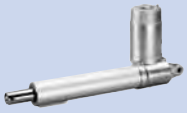	WSP	2 600	2 600	68	57	100-700	Powerful	59
	ASM	4 000	4 000	58	48	100-700	Powerful	60
	DSP	4 500	4 500	62	52	100-700	Powerful	61
	SKG	15 000	15 000	66	55	100-700	Powerful	62
	SKD	15 000	15 000	30	25	100-700	Powerful	63
	STW	15 000	15 000	14	12	100-700	Powerful	64
	STG	15 000	15 000	17	14	100-700	Powerful	65
	STD	15 000	15 000	12	10	100-700	Powerful	66
	SKS/SKA	30 000	30 000	54	45	100-700	Powerful	67
	SLS	50 000	50 000	88	74	100-700	Powerful	68
ECOMAG 	ECO	6 000	4 000	13	9	50-300	Compact	70
ILD 	ILD	20 000	20 000	200	200	100-700	Fast & controllable	72
CALA 36 	CALA 36A	600	600	23	12	50-200	In-line	74
MATRIX 	MAX1	4 000	4 000	18	13	50-700	Silent operation	77
	MAX3	8 000	6 000	18	13	50-700	Silent operation	78
	MAX6	8 000	6 000	18	15	50-700	Plug & play	79

Selection guide

Linear actuators	Type	Max. force push	pull	Max. speed no load	full load	Stroke (S)	Features	Page
		N	N	mm/s	mm/s	mm		No.
CARE 	**CARE 33H**	800	800	45	32	50-500	Silent operation	82
	CARE 33M	1 400	1 400	22	16	50-500	Silent operation	82
	CARE 33A	2 000	2 000	12	8	50-300	Silent operation	82
RUNNER 	**RU20**	8 000	8 000	10	7	100 - 700	High push force	84
	RU21	10 000	8 000	8	5	100 - 700	High push force	84
	RU22	12 000	8 000	7	4	100 - 700	High push force	84
	RU23	8 000	8 000	14	8	100 - 700	High push force	84
	RU24	10 000	8 000	12	6	100 - 700	High push force	84
	RU25	12 000	8 000	9	5	100 - 700	High push force	84
MAGPUSH 	**GC 84 TL**	500	300	6	6	200-500	Silent operation	87
	GC 84 UB	400	400	8	8	210	Silent operation	88
	HC 85 UB	1 500	1 500	10	10	260	Silent operation	88
	LC 12,6 UB	3 000	3 000	30	30	310	Silent operation	89
	LC 6,6 UB	3 000	3 000	15	15	310	Silent operation	89
MAGTOP 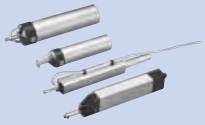	**CS10**	200	200	37	30	105-300	Small & compact	91
	CS20	450	450	22	18	160-300	Small & compact	92
	CS31	500	500	22	19	200-400	Small & compact	93
	CS40	450	450	12	8	200-500	Small & compact	94
	CS50	1 000	1 000	24	21	300-500	Small & compact	95
	CS60	600	600	22	22	180-500	Small & compact	96
	CS70	2 000	2 000	19	14	180-500	Small & compact	97
VARIMAG 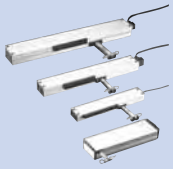	**CC10**	150	300	45	38	130-380	Small & compact	99
	CC20	200	200	17	10	200-250	Small & compact	100
	CC30	250	250	32/28	28/26	400	Small & compact	101
	CC40	350	350	18	15	280-380	Small & compact	102
	CC50	400	400	28/38	17/22	420-835	Small & compact	103
MAGRACK 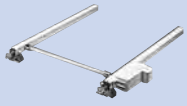	**CK**	1 600/1 200	1 600/1 200	22/7	20/5	180-1000	Small & compact	104
MAGDRIVE 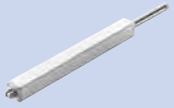	MD20	6 000	200	15	8	100-700	Slim & silent	110

Selection guide

Linear actuators	Type (series)	Max. force push	pull	Max. speed no load	full load	Stroke (S) standard	Features	Page
		N	N	mm/s	mm/s	mm		No.
	**MD4-A1**	3 000	0	6,7	3,7	100-400	EN 60.601-1	112
	MD4-A2	2 000	0	13	6,4	100-400	EN 60.601-1	112
	MD4-A3	1 200	0	25	13,4	100-400	EN 60.601-1	112
	MD4-A4	1 000	0	32	20	100-400	EN 60.601-1	112
	MD4-A5	3 000	0	8,5	5,0	100-400	EN 60.601-1	112
	MD4-A6	3 000	0	5,0	3,0	100-400	EN 60.601-1	112
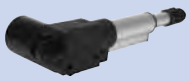	**FD-A1**	6 000	4 000	4,2	2,6	50-300	Silent operation	114
	FD-A2	3 000	2 000	8,2	6,2	50-300	Silent operation	114
	**LD4-A1**	3 000	0	6,7	3,7	100-400	Silent operation	116
	LD4-A2	2 000	0	13	6,4	100-400	Silent operation	116
	LD4-A3	1 200	0	25	13,4	100-400	Silent operation	116
	LD4-A4	1 000	0	32	20	100-400	Silent operation	116
	LD4-A5	3 000	0	8,5	5,0	100-400	Silent operation	116
	LD4-A6	3 000	0	5,0	3,0	100-400	Silent operation	116
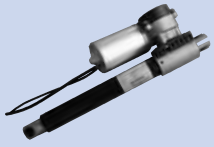	**LD6-A1**	4 000	0	7	5	100-400	Universal use	118
	LD6-A2	2 000	0	13	11	100-400	Universal use	118
	**M24V-S**	800	800	10,5	7,0	100-300	Compact	120
	M24V-D	500	500	20	15	100-300	Compact	120
	**IMD3-05**	120	120	57	45	50-300	Silent operation	122
	IMD3-10	240	240	30	24	50-300	Silent operation	122
	IMD3-20	500	500	17	13	50-300	Silent operation	122
	IMD3-30	750	750	10	9	50-300	Silent operation	122
	IMD3-40	1 000	1 000	8	6	50-300	Silent operation	122
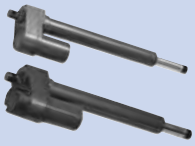	**ID8A-10**	1 500	1 500	38	25	100-600	Robust	124
	ID8A-20	2 500	2 500	20	13	100-600	Robust	124
	ID8B-05	2 300	2 300	68	35	100-600	Robust	126
	ID8B-10	3 500	3 500	37	22	100-600	Robust	126
	ID8B-20	4 500	4 500	21	13	100-600	Robust	126
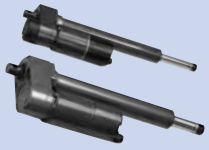	**IA4A-10**	1 500	1 500	29	25	100-600	Robust	128
	IA4A-20	2 300	2 300	16	14	100-600	Robust	128
	IA4B-05	2 300	2 300	57	46	100-600	Robust	130
	IA4B-10	4 500	4 500	29	25	100-600	Robust	130
	IA4B-20	6 000	6 000	15	12	100-600	Robust	130

Selection guide

Linear actuators	Type (series)	Max. force push	pull	Max. speed no load	full load	Stroke (S) standard	Features	Page
		N	N	mm/s	mm/s	mm		No.
	SJ-255	2 000	2 000	7,2	6,6	100-600	AC actuator	132
	SJ-256	2 500	2 500	6,0	5,5	100-600	AC actuator	132
	SJ-257	3 000	3 000	4,5	4,0	100-600	AC actuator	132
	SJ-355	3 000	3 000	7,2	6,6	100-600	AC actuator	132
	SJ-356	3 500	3 500	6,0	5,5	100-600	AC actuator	132
	SJ-358	4 000	4 000	4,5	4,0	100-600	AC actuator	132
	SJ-455	4 000	4 000	7,2	6,6	100-600	AC actuator	132
	SJ-456	4 500	4 500	6,0	5,5	100-600	AC actuator	132
	SJ-458	5 000	5 000	4,5	4,0	100-600	AC actuator	132

Rotary actuators	Type	Max. torque	Max. speed	Size	Features	Page
		Nm	rpm	mm		No.
CRAB 17	CRAB 17	70	8	125	Compact	140
	CRAB 17	105	20	125	Compact	140
CRAB 05	CRAB 05	100	3	86	Compact	142
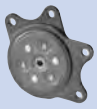						

Control units	Type	Control	Max. motor connections	Input	Output	Page
			n°	V AC/DC	V/A	No.
KOM	KOM 1	Basic functions	4	230/120	24/6	146
	KOM 2	Encoder processing	5	230/120	24/6 or 12	147
	KOM 3	Basic functions	3	230/120	24/6	148
	KOM 3T	Basic functions	2	230/120	24/9	148
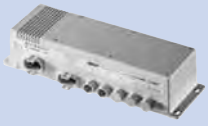	KOM 6	Encoder processing	4	230/120	24/6 or 12	149
MCU	MCU	Basic functions	2	24	24/6	150
						
LD	LD-015	Encoder processing	2	230/120	24/10	151
	LD-014	Encoder processing	4	230/120	24/12	151
						

Selection guide

Control units	Type	Control	Max. motor connections	Input	Output	Page
			n°	V AC/DC	V/A	No.
SEM	**SEM1**	Basic functions	4	230/120	24/5	152
						
CAEN	**15**	Basic functions	1	230	24/15	153
	10R	Basic functions	1	230/120	24/1-10	153
						
CAEV	**110/220**	Basic functions	1	230/120	400/200	154
						
CAED ANR	**5-24R -P 0**	Encoder processing	1	22-28	24/5	154
	9-24R -P 0	Encoder processing	1	22-28	24/9	154
						
CAED	**3-24R**	Basic functions	1	24	24/3	155
	5-24R	Basic functions	1	24	24/5	155
	9-24R	Basic functions	1	24	24/9	155
						
CAEP	**10P-SL**	Basic functions	1	230	24/2-10	155
	8V	Basic functions	1	230	24/10	155
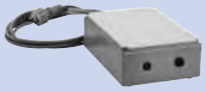						
CAEL	**10-24R**	Basic functions	1	230	24/2-10	156
						
BCU	**BCU**	Basic functions	3	230/120	24/7	156
						

Selection guide

Control units	Type	Control	Max. motor connections	Input	Output	Page
			n°	V AC/DC	V/A	No.
SCU 	SCU	Encoder processing	6	24/120/230	24/18-30	158
VCU 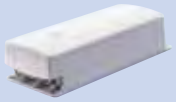	VCU	Basic functions	5	24/120/230	24/7-30	160
	CB200S	Basic functions	3	(100 - 240)*	24/3	162
	CB200A	Encoder processing	2	(100 - 240)*	24/3	162
	CB300S	Basic functions	2	(100 - 240)*	24/3	163
	CB300A	Encoder processing	2	(100 - 240)*	24/3	163
	CB800S	Basic functions	4	(100 - 240)*	24/6	164
	CB800B	Basic functions	4	(100 - 240)*	24/6	164
	CB800E	Basic functions	4	(100 - 240)*	24/6	164

* See type key for available voltage.

Hand switches	Type	Operating power	Max. operating motors	Prot. class	Colour	Page
		VDC/mA	n°	IP		No.
EHA 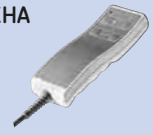	EHA 1	12/50	4	67	Grey	168
	EHA 2	12/50	5	67	Grey	169
	EHA 3	12/50	4	67	Grey	170
IHA 	IHA 1	–	5	67	Black	171
EHE 	EHE 1	38/50	4	X7	Grey /black	172
	EHE 6	38/50	5	X7	Grey	173
PHC 	PHC	–	4	66	Grey	174

Selection guide

Hand switches	Type	Operating power	Max. operating motors	Protection class	Colour	Page
		VDC/mA	n°	IP		No.
CAES 	CAES 31B	30/33	1	54	Black	174
	CAES 31C	30/33	1	54	Black	174
	CAES 31D	30/33	1	54	Black	174
	CAES 32D	30/33	2	54	Black	174
	HS112	40/50	1	51	Black	175
	HS124	40/50	2	51	Black	175
	HS126	40/50	2	51	Black	175
	HS138	40/50	3	51	Black	175
	HS148	40/50	4	51	Black	175

Foot switches	Type	Operating power	Max. operating motors	Prot. class	Colour	Page
		VDC/mA	n°	IP		No.
ST 	ST	12/50	3	X5	Blue/anthracite	180
PFP 	PFP1	–	1	21	Grey/anthracite	182
	PFP2	–	2	21	Grey/anthracite	182

Desk switches	Type	Operating power	Max. operating motors	Prot. class	Colour	Page
		VDC/mA	n°	IP		No.
ST 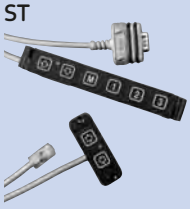	ST	12/50	3	X0	Black	184
LD 	LD	5/50	2	32	Black	186
CAFHT 	T1	40/50	1	X4	Grey/black	187
	T2	40/50	2	X4	Grey/black	187

Selection guide

Desk switch (pneumatic)	Type	Max. operating motors	Air tube	Colour	Page
		n°			No.
PAM	**PAM 1-130827**	1	None	Light grey	187
	PAM 1-130659	1	2,65 m coiled	Light grey	187
	PAM 1-130256	1	1,50 m straight	Anthracite	187
	PAM 1-130966	1	3,00 m straight	Anthracite	187
	PAM 1-130348	1	2,65 m coiled	Anthracite	187



Easy3	Type	Max. force push	Max. force pull	Max. speed no load	Max. speed full load	Stroke (S)	Features	Page
		N	N	mm/s	mm/s	mm		No.
Easy3	**02**	600	600	23	12	50-200	In-line	190
	03	2 000	2 000	12	8	100-300	Silent operation	190
	04	2 000	2 000	12	8	100-300	Silent operation	191
	05	2 000	2 000	12	8	100-300	Silent operation	191



Guiding tubes	Type	Sections 2	3	4	5	6	7	Stroke	Page
								mm	No.
FRE	FRE	x	x	x*	x*	x*	x*	200-700	192

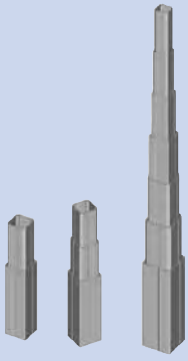

* on request only

Selection guide
Project sales only!

Linear drive profile	Type	Max. load dynamic load	Max. load static load	Max. speed no load	Max. speed full load	Stroke (S)	Features	Page
		N	N	mm/s	mm/s	mm		No.
CAWA 	CAWA	1 650	3 500	22	14	500-1 000	Powerful & compact	194

Rotary actuators	Type	Torque	Max. speed	Size	Features	Page
		Nm	rpm	mm		No.
CRAB 	CRAB 10	75	30	120	Compact	195
	CRAB 11	200	20	120	Compact	195
	CRAB 12	200	20	120	Compact	195
	CRAB 13	150	20	120	Compact	195
	CRAB 20	400	15	155	Zero backlash	195
	CRAB 30	1 000	10	228	Zero backlash	195
	CRAB 40	1 700	8	286	Zero backlash	195

ServoMove	Type	Max. dyn. load	Max. speed	Stroke	Features	Page
		N	mm/s	mm		No.
CASI 	CASI 32	3 500	190	50-700	Servo system	196
	CASI 40	5 200	680	50-700	Servo system	196
	CASI 60	18 000	1 200	50-1 000	Servo system	196

Compact Electro-mech. Cylinder	Type	Max. Speed		Type	Max. Speed		Type	Force	Max. Speed
	CEMC	kN	mm/s	CEMC	kN	mm/s	CEMC	kN	mm/s
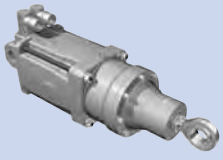	2404-xxx-62L	8,7	300	2404-xxx-63I	13,1	300	2404-xxx-63N	13,1	266
	2406-xxx-62L	5,8	450	2406-xxx-63I	8,7	450	2406-xxx-63N	8,7	400
	2407-xxx-62L	5,0	525	2407-xxx-63I	7,5	525	2407-xxx-63N	7,5	466
	1804-xxx-42J	4,7	350						

Page 197

Compact Electro-mech. Cylinder	Type	Nominal force*	Max. speed**	Type	Nominal force*	Max. speed**	Type	Nominal force*	Max. speed**
	SRSA	kN	mm/s	SRSA	kN	mm/s	SRSA	kN	mm/s
	2505	6,5	375	4805	38,7	230	7510	106,0	215
	2510	6,2	660	4810	34,2	465	7515	74,4	325
	3005	8,5	330	4815	23,7	700	7520	58,0	430
	3010	6,2	660	6010	47,7	360	4020	5,7	750
	3905	19,2	290	6015	33,5	535	4040	3,8	1 500
	3910	14,2	580	6020	26,0	715			

* Nominal force for one motor size. Other choices possible, please contact SKF.
** Max. speed for one motor size. Other choices possible, please contact SKF.

Page 198

Notes

Notes

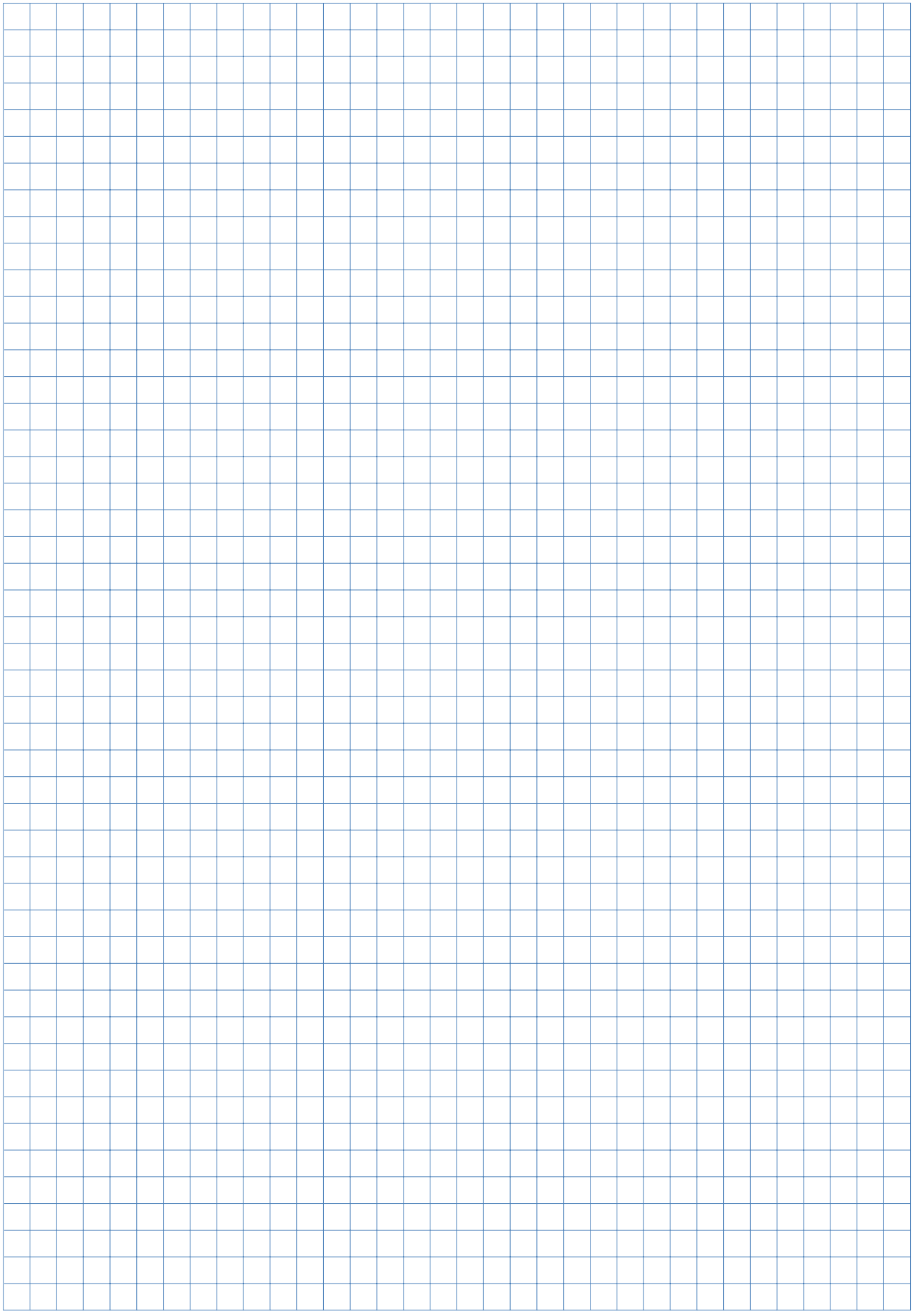

Selection guide - Combination matrix for actuators & controls

Are you looking for a complete system including actuators, control units and operating units?
A selection of control units and hand sets is available for most actuators in this catalogue.

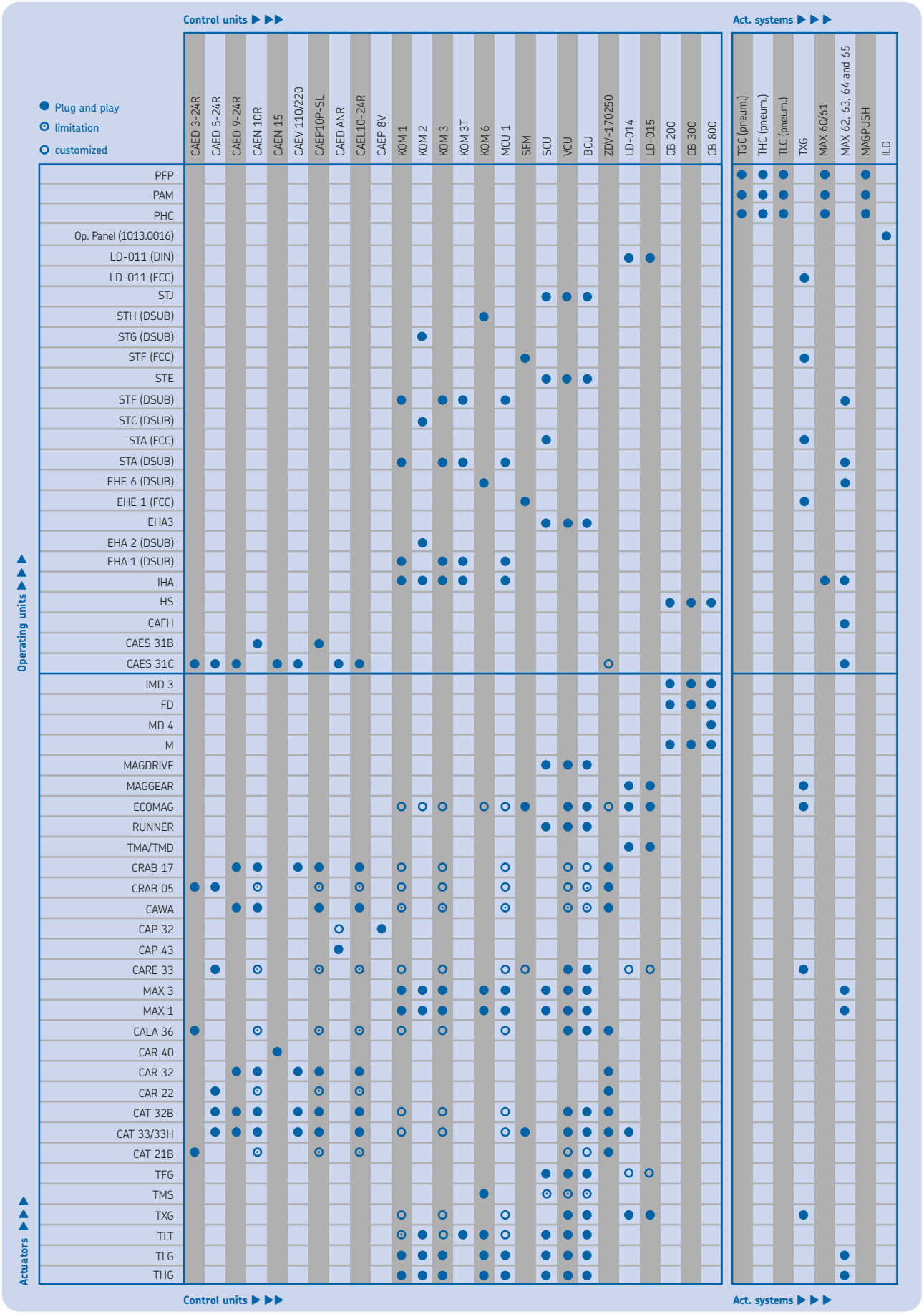

Telescopic pillars

TELEMAG
The TELEMAG line of telescopic pillars features the best combination of minimum retracted length and large stroke length. They are used wherever robust and safe guiding systems are needed. The attractive design allows the TELEMAG to often become part of the overall design of the equipment. The line of TELEMAG actuators is complemented by KOM control units, which allows a flexible and application focused system control.



Benefits
- High offset load
- Silent operation
- Robust
- Long lifetime

Type	Force push	pull	Max. speed no load	full load	Stroke (S)	Retr. length (L)	Voltage	Protection	Weight
	N	N	mm/s	mm/s	mm	mm	V AC/DC	IP	kg
TFG	2 500	2 500	19	15	200-400	S+130	120/230 AC	30	8-13
TGC 8AWA	1 000	1 000	11	9	200-700	S+145/150	120/230 AC	30	4,5-7,5
TGC 8AWD	1 000	1 000	11	9	300-700	S+45/50	120/230 AC	30	5,9-9,5
THC 8AWA	1 800	1 800	15	12	200-700	S+155/160	120/230 AC	30	7,9-13,5
THC 8AWD	1 800	1 800	15	12	230-700	S+60/65	120/230 AC	30	8,6-17,5
TLC 12ZWA	4 000	4 000	16	11	100-700	S+175/185	120/230 AC	30	15,2-24,5
TLC 12ZWD	4 000	4 000	16	11	255-700	S+60/70	120/230 AC	30	18,3-30,5
TFG	2 500	2 500	19	15	200-400	S+130	24 DC	30	8-13
THG 10/11-C	1 000	0	15	12	200-700	S+270/180	24 DC	30	8-14
TLT 10-C1	1 000	0	36	25	300-700	Sx0,5+170	24 DC	40	15-30
TLG 10/11-C	1 500	0	33	25	200-700	S+180	24 DC	30	15-30
THG 10/11-B	2 000	0	7	5	200-700	S+270/180	24 DC	30	8-14
TLT 10-B1	2 000	0	19	13	300-700	Sx0,5+170	24 DC	40	15-30
TLT 10/11-C2	2 000	0	42	25	300-700	Sx0,5+240	24 DC	40	15-30
TLG 10/11-B	2 500	0	17	13	200-700	S+180	24 DC	30	15-30
TLT 10-A1	3 000	0	16	11	300-700	Sx0,5+170	24 DC	40	15-30
TLG 10/11-A	4 000	0	14	10	200-700	S+180	24 DC	30	15-30
TLT 10/11-A2	4 000	0	19	13	300-700	Sx0,5+240	24 DC	40	15-30

TELEMAG TFG

TELEMAG TFG is a very compact, fast and powerful lifting pillar for loads of up to 2 500 N. The TFG can be used for push or pull applications. Thanks to the rigid aluminium profiles and the precision glide pads, the TFG can lift off-centre loads without distorting. The pillar consists of three designed aluminium profiles inside each other which are extended and retracted by means of an integrated linear actuator. TFG integrates a DC-motor with worm gear, whose rotary motion is converted into a linear motion by means of a spindle nut system. The pillars run very quietly and with minimum vibration at a maximum speed of 19 mm/s. Maximum stroke length is 400 mm. The TFG is self-locking for both push and pull. The stroke is limited by integrated end limit switches. For additional safety the TFG has cut-off switches at the end positions as well as a back up nut. The TFG is compatible with all the other actuators from SKF Magnetic and can be utilized in a full system of actuators and controls.

Benefits

- Push or pull force
- Compact design
- Fast movement
- Powerful

Options

- Encoder
- Cable feed-through

Accessories

- Control boxes
- Hand switches
- Foot switches

Standards

- EN/IEC 60601-1
- UL 60601-1



Technical data	Type	24 VDC	120/230 VAC
Max. force* (push or pull)	N	2 500	2 500
Speed	mm/s	15 to 19	15 to 19
Stroke	mm	200 to 400	200 to 400
Retracted length (3 sections)	mm	S+130	S+130
Voltage input	V	24	120/230
Current consumption	A	5	1,8/1
Duty cycle intermittent operation		1/9 min	1/9 min
Duty cycle short-time operation		3 min	3 min
Ambient temperature	°C	+10 to +40	+10 to +40
Protection class	IP	IP30	IP30
Isolation class		SELV	I
Weight	kg	8 to 13	8 to 13

*See offset load diagram on next page.

Type code for accessories

Accessories		Order N°
Top mounting plate	Bore 72x72 mm	333360
Bottom mounting plate	Bore 102,5x102,5 mm	264363
Screw for top mounting plate	M10x25 (1 screw required)	510978
Screw for top mounting plate	M6x30 (4 screws required)	510709
Screw for bottom mounting plate	M6x30 (4 screws required)	510709
Mains cable SEV	3 000 mm, black, 3x0.75 mm^2	304345
Mains cable Schuko	3 000 mm, black, 3x0.75 mm^2	304346
Mains cable US	3 000 mm, black, 3x0.75 mm^2	304347
Mains cable British Standard	3 000 mm, black, 3x0.75 mm^2	304355

Telescopic pillars
TELEMAG TFG

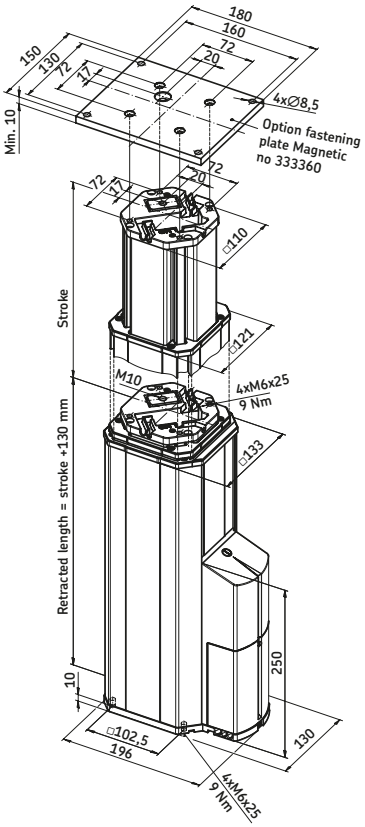

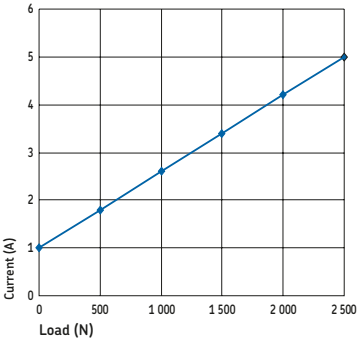

Current consumption

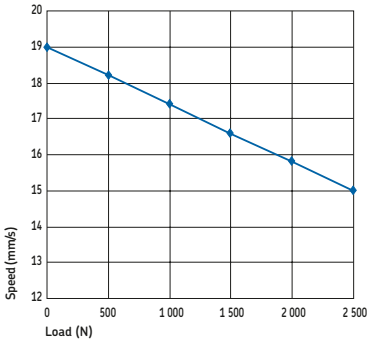

Speed

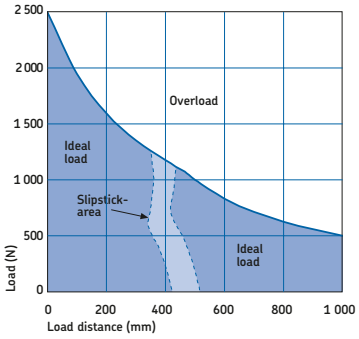

Offset load diagram - 200 mm stroke

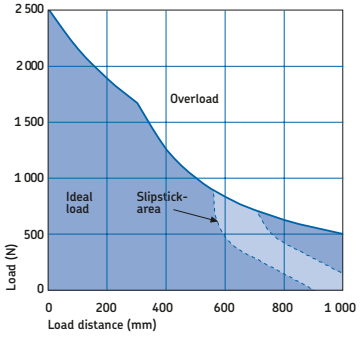

Offset load diagram - 300 mm stroke

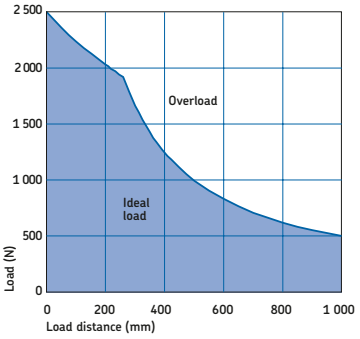

Offset load diagram - 400 mm stroke

TFG □ 0-23 □□□-□□□-000

Type

Voltage:

24 VDC	1
120 VAC (50/60 Hz)	5
230 VAC (50 Hz)	9

Stroke (S):

200 mm	200
250 mm	250
300 mm	300
350 mm	350
400 mm	400

Option:

No option	000
With dual encoder, (14 pulses per 9 mm travel)	E
With mains cable feedthrough (3xAWG16)	C
With control cable feedthrough (10xAWG28)	H

Telescopic pillars
TELEMAG TGC

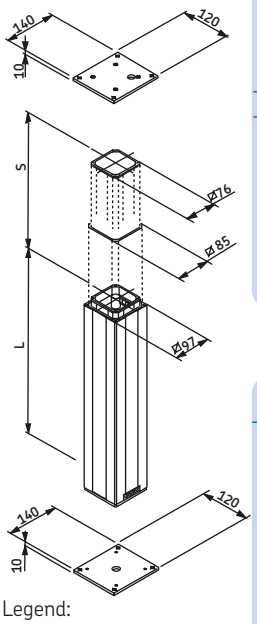

Legend:
S = stroke
L = retracted length

Type	Force push	pull	Speed 120 V version	230 V version	Stroke (S)	Retr. length (L)	Voltage	Protection class	Weight
	N	N	mm/s	mm/s	mm	mm	VAC	IP	kg
TGC 8AWA	1 000	0	11	9	200-700	S+145	120/230	30	4,5-7,5
TGC 8AWA	0	1 000	11	9	200-700	S+150	120/230	30	4,5-7,5
TGC 8AWD	1 000	0	11	9	300-700	S+45	120/230	30	5,9-9,5
TGC 8AWD	0	1 000	11	9	300-700	S+50	120/230	30	5,9-9,5

Type code for accessories

Accessories	Order N°
Top mounting plate for 2 x tube set	964280
Bottom mounting plate for 2 x tube set	964281
Top mounting plate for 3 x tube set	964280
Bottom mounting plate for 3 x tube set	965121
Screw (4/plate), only for 2 x tube set, bottom plate	510751
Screw (4/plate), only for 3 x tube set, bottom plate	510709
Lock washer (4/plate)	510024

TGC	8AW					0	
Type							
Load:							
1 000 N	A						
Tube set:							
Tube set 2x		A					
Tube set 3x		D					
Control:							
Electrical control			S				
Pneumatic control			K				
Low-voltage control			*N*				
Motor voltage:							
230 VAC/50 Hz (no code)							
120 VAC/60 Hz				2			
Special voltage				*9*			
System of protection /test:							
Standard IP30 (no code)							
UL test					U		
Construction:							
Push force						0	
Customer-specific						*1*	
Pull force						*3*	
Colour:							
Aluminium anodized						0	
Stroke (S):							
200 mm (only for tube set 2x)							2
300 mm							3
400 mm							4
500 mm							5
600 mm							6
700 mm							7

Options written in BLUE text are included in the Easy Range concept, which is our special service range for quick delivery from stock.
A type key made with ALL POSITIONS in BLUE TEXT qualifies a product for this service.
Options written in italic fonts are not available as standard. Please contact SKF for verification.

Telescopic pillars
TELEMAG THC

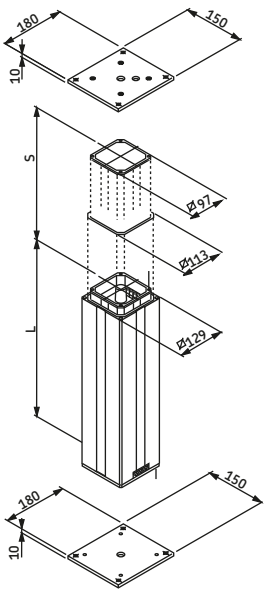

Legend:
S = stroke
L = retracted length

Type	Force push	pull	Speed 120 V version	230 V version	Stroke (S)	Retr. length (L)	Voltage	Protection class	Weight
	N	N	mm/s	mm/s	mm	mm	VAC	IP	kg
THC 8AWA	1 800	0	15	12	200-700	S+155	120/230	30	7,9-13,5
THC 8AWA	0	1 800	15	12	200-700	S+160	120/230	30	7,9-13,5
THC 8AWD	1 800	0	15	12	230-700	S+60	120/230	30	8,6-17,5
THC 8AWD	0	1 800	15	12	230-700	S+65	120/230	30	8,6-17,5

Type code for accessories

Accessories	Order N°
Top mounting plate for 2 x tube set	264265
Bottom mounting plate for 2 x tube set	264363
Top mounting plate for 3 x tube set	264265
Bottom mounting plate for 3 x tube set	264237
Screw (4/plate) for top mounting plate	510671
Screw (4/plate) for bottom mounting plate	510709
Plug AC Telemag 3 pin	265518
Plug AC Telemag 5 pin	265519

T	H	C	8		W						0	

Type

Load:
1 800 N — A
1 500 N — *B*
1 300 N — *C*

Tube set:
Tube set 2x — A
Tube set 3x — D

Control:
Electrical control — S
Pneumatic control — K
Low-voltage control — *N*

Motor voltage:
230 VAC/50 Hz (no code)
120 VAC/60 Hz — 2
Special voltage — 9

System of protection /test:
Standard IP30 (no code)
UL test — U

Construction:
Push force — 0
Customer-specific — *1*
Pull force — *3*

Colour:
Aluminium anodized — 0

Stroke (S):
100 mm — 1
200 mm (only for tube set 2x) — 2
300 mm — 3
400 mm — 4
500 mm — 5
600 mm — 6
700 mm — 7

Options written in BLUE text are included in the Easy Range concept, which is our special service range for quick delivery from stock.
A type key made with ALL POSITIONS in BLUE TEXT qualifies a product for this service.
Options written in italic fonts are not available as standard. Please contact SKF for verification.

Telescopic pillars
TELEMAG THG

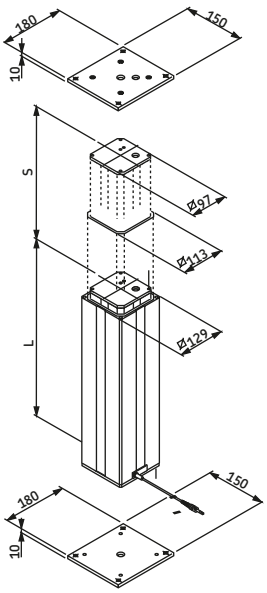

Legend:
S = stroke
L = retracted length

Type	Force push	pull	Speed no load	full load	Stroke (S)	Retr. length (L)	Voltage	Protection class	Weight
	N	N	mm/s	mm/s	mm	mm	VDC	IP	kg
THG 10/11-BA	2 000	0	7	5	200-700	S+270	24	30	8-14
THG 10/11-CA	1 000	0	15	12	200-700	S+270	24	30	8-14
THG 10/11-BD	2 000	0	7	5	200-700	S+180	24	30	8-14
THG 10/11-CD	1 000	0	15	12	200-700	S+180	24	30	8-14

Type code for accessories

Accessories	Order N°
Top mounting plate for 2x tube set	264265
Bottom mounting plate for 2x tube set	264363
Top mounting plate for 3x tube set	264265
Bottom mounting plate for 3x tube set	264237
Screw (4/plate) for mounting plate (2 tube set)	510709
Screw (4/plate) for mounting plate (3 tube set)	510707

T H G 1 [ ] [ ] [ ] [ ] [ ] [ ] - 0 0 0

Type

Motor voltage:
24 VDC 0
24 VDC with integrated current cut-off *1*

Load:
2 000 N B
1 000 N *C*

Tube set:
Tube set 2x A
Tube set 3x D

Stroke (S):
200 mm 2
300 mm 3
400 mm 4
500 mm 5
600 mm 6
700 mm 7

Cable/connecting plug:
Straight, 1,0 m, jack plug *1*
Straight, 2,3 m, jack plug 2
Coiled, 0,6 m, jack plug *A*
Straight, 1,0 m, DIN8 plug 3
Straight, 2,3 m, DIN8 plug 4
Coiled, 0,6 m, DIN8 plug B

Option:
No option 0
Single encoder, 8 pulses, cable with jack plug A
Potentiometer, 1 kΩ, 2 Watt, 0,25 % linearity, 10 turns (tube set 3x only) *B*
Cable feedthrough, 5 x 0,75 mm², top +160 mm, bottom +800 mm *C*
Cable feedthrough + encoder *D*
Cable feedthrough + potentiometer (tube set 3x only) *E*
Dual encoder, cable with DIN8 plug *F*
Cable feedthrough, dual encoder, cable with DIN8 plug *G*

Options written in italic fonts are not available as standard. Please contact SKF for verification.

Telescopic pillars
TELEMAG TLC

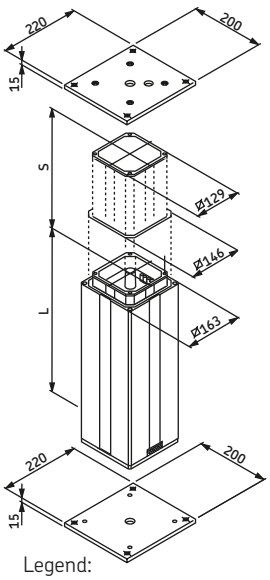

Legend:
S = stroke
L = retracted length

Type	Force push	pull	Speed 120 V version	230 V version	Stroke (S)	Retr. length (L)	Voltage	Protection class	Weight
	N	N	mm/s	mm/s	mm	mm	VAC	IP	kg
TLC 12ZWA	4 000	0	16	11	100-700	S+175	120/230	30	15,2-24,5
TLC 12ZWA	0	4 000	16	11	200-700	S+185	120/230	30	15,2-24,5
TLC 12ZWD	4 000	0	16	11	255-700	S+60	120/230	30	18,3-30,5
TLC 12ZWD	0	4 000	16	11	300-700	S+70	120/230	30	18,3-30,5

Type code for accessories

Accessories	Order N°
Top mounting plate for 2x tube set	290268
Bottom mounting plate for 2x tube set	290351
Top mounting plate for 3x tube set	290268
Bottom mounting plate for 3x tube set	290265
Screw (4/plate) for mounting plate	510707
Plug AC Telemag 3 pin	265518
Plug AC Telemag 5 pin	265519

TLC 12 W - 0

Type

Load:
4 000 N — Z
3 000 N — *X*
2 000 N — *S*

Tube set:
Tube set 2x — A
Tube set 3x — D

Control:
Electrical control — S
Pneumatic control — K
Low-voltage control — *N*

Motor voltage:
230 VAC/50 Hz (no code)
120 VAC/60 Hz — 2
Special voltage — *9*

System of protection/test:
Standard IP30 (no code)
UL approved — U

Construction:
Push force — 0
Customer-specific — *1*
Pull force — *3*

Colour:
Aluminium anodized — 0

Stroke (S):
100 mm, only for tube set 2x, push — 1
255 mm, only for tube set 3x, push — 1
200 mm, only for tube set 2x — 2
300 mm — 3
400 mm — 4
500 mm — 5
600 mm — 6
700 mm — 7

Options written in BLUE text are included in the Easy Range concept, which is our special service range for quick delivery from stock.
A type key made with ALL POSITIONS in BLUE TEXT qualifies a product for this service.
Options written in italic fonts are not available as standard. Please contact SKF for verification.

Telescopic pillars
TELEMAG TLG

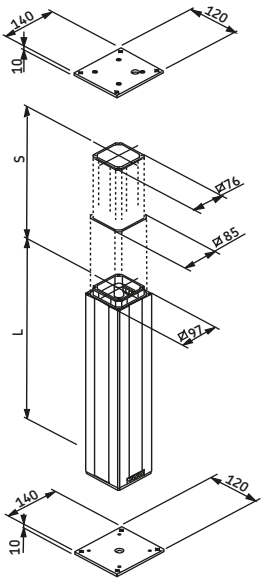

Legend:
S = stroke
L = retracted length

Type	Force push	pull	Speed no load	full load	Stroke (S)	Retr. length (L)	Voltage	Protection class	Weight
	N	N	mm/s	mm/s	mm	mm	VDC	IP	kg
TLG 10/11-A	4 000	0	14	10	200-700	S+180	24	30	15-30
TLG 10/11-B	2 500	0	17	13	200-700	S+180	24	30	15-30
TLG 10/11-C	1 500	0	33	25	200-700	S+180	24	30	15-30

Type code for accessories

Accessories	Order N°
Top mounting plate for 2x tube set	290268
Bottom mounting plate for 2x tube set	290351
Top mounting plate for 3x tube set	290268
Bottom mounting plate for 3x tube set	290265
Screw (4/plate) for mounting plate	510707

T L G 1 [ ] [ ] [ ] [ ] [ ] [ ] - 0 0 0

Type

Motor voltage:
24 VDC 0
24 VDC, with integrated current cut-off *1*

Load:
4 000 N A
2 500 N B
1 500 N C

Tube set:
Tube set 2x A
Tube set 3x D

Stroke (S):
200 mm 2
300 mm 3
400 mm 4
500 mm 5
600 mm 6
700 mm 7

Cable/connecting plug:
Straight, 1,0 m, jack plug *1*
Straight, 2,3 m, jack plug 2
Coiled, 0,6 m, jack plug *A*
Straight, 1,0 m, DIN8 plug 3
Straight, 2,3 m, DIN8 plug 4
Coiled, 0,6 m, DIN8 plug B

Option:
No option 0
Single encoder, 8 pulses, cable with jack plug A
Potentiometer, 1 kΩ, 2 Watt, 0,25 % linearity, 10 turns *B*
Cable feedthrough, 5x0,75 mm 0,25 % linearity, 2, led out, top +160 mm, bottom + 800 mm *C*
Cable feedthrough, single encoder *D*
Cable feedthrough, potentiometer *E*
Dual encoder, cable with DIN8 plug *F*
Cable feedthrough, dual encoder, cable with DIN8 plug *G*

Options written in BLUE text are included in the Easy Range concept, which is our special service range for quick delivery from stock.
A type key made with ALL POSITIONS in BLUE qualifies a product for this service.
Options written in italic fonts are not available as standard. Please contact SKF for verification.

Telescopic pillars
TELEMAG TLT

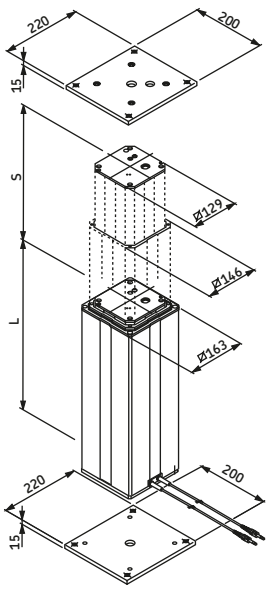

Type	Force push	pull	Speed no load	full load	Stroke (S)	Retr. length (L)	Voltage	Protection class	Weight
	N	N	mm/s	mm/s	mm	mm	VDC	IP	kg
TLT10-A1	3 000	0	16	11	300-700	0,5 x S+170	24	40	15-30
TLT10/11-A2	4 000	0	19	13	300-700	0,5 x S+240	24	40	15-30
TLT10-B1	2 000	0	19	13	300-700	0,5 x S+170	24	40	15-30
TLT10-C1	1 000	0	36	25	300-700	0,5 x S+170	24	40	15-30
TLT10/11-C2	2 000	0	42	25	300-700	0,5 x S+240	24	40	15-30

Legend:
S = stroke
L = retracted length

Type code for accessories

Accessories	Order N°
Top mounting plate	290268
Bottom mounting plate	290265
Screw (4/plate) for mounting plate	510707

T L T 1 [ ] [ ] [ ] [ ] [ ] - 0 0 0

Type

Motor voltage:

24 VDC	0
24 VDC with integrated current cut-off (only for A2 and C2)	*1*

Load / Speed

4 000 N	A2
3 000 N	A1
2 000 N / 19-13 mm/s	B1
2 000 N / 45-25 mm/s	C2
1 000 N	C1

Stroke (S):

300 mm	3
400 mm	4
500 mm	5
600 mm	6
700 mm	7

Cable/connecting plug:

Straight, 1,0 m, jack plug	*1*
Straight, 2,3 m, jack plug	*2*
Coiled, 0,6 m, jack plug	*A*
Straight, 1,0 m, DIN8 plug	3
Straight, 2,3 m, DIN8 plug	4
Coiled, 0,6 m, DIN8 plug	*B*

Option:

No option	0
Single encoder, 8 pulses, cable with jack plug	A
Cable feedthrough, 3x1,5 mm², top +160 mm, bottom +800 mm	*C*
Cable feedthrough, single encoder	*D*
Dual encoder, cable with DIN8 plug	*F*

Options written in italic fonts are not available as standard. Please contact SKF for verification.

TMS

The TMS is a robust telescopic pillar for lifting heavy eccentric loads. Two spindles are run via a double worm gear in order to implement the lift motion. The spindle systems are self-locking ("Mechanical" only for gear ratio 1:40), so that no external brake is required on the drive. The TMS offers an optimal stroke/retracted length ratio. It is fast, silent and able to lift up to 400 kg centric load or 150 kg eccentric load in a 2 m distance away from the pillar.



Benefits

- High torque, i.e. high offset load
- Good stroke/retracted length ratio
- Strong
- High flexibility
- Compact design
- Fast

Reference images - see ordering key on next page



Standard



Single



Compact



Small



Light

Type	Force push	pull	Max. speed no load	full load	Stroke (S)	Retr. length (L)	Voltage	Protection class	Weight
	N	N	mm/s	mm/s	mm	mm	VDC	IP	kg
Easy	4 000	-	28	16	300-700	Sx0,5+176	24	SELV	64-85
Mechanical	4 000	4 000	-	-	300-700	Sx0,5+176	-	-	61-82
Compact	4 000	4 000	-	-	300-700	Sx0,5+188	-	-	65-90
Compact-Easy	4 000	-	28	16	300-700	Sx0,5+188	24	SELV	65-90

TMS Easy/Mechanical

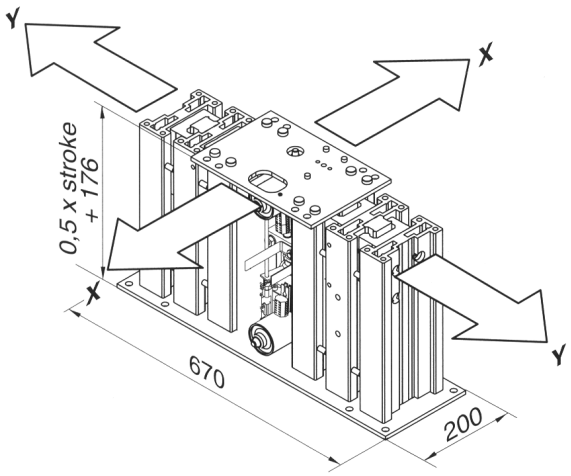

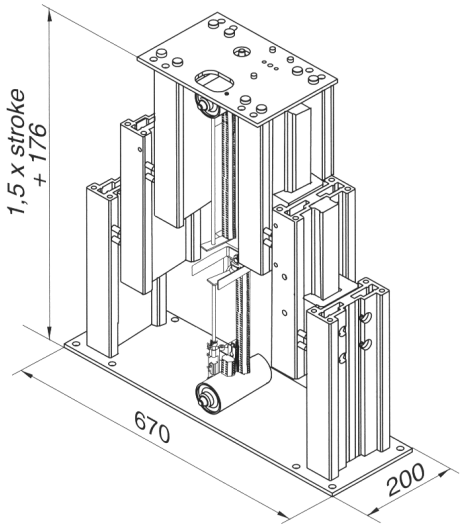

T M S □□ - □□ □□□ - □□□ 00

Type

Voltage:

No (mechanical)	0
24 VDC (easy)	1

Design versions:

Standard	0
Single	1
Compact	2
Small	3
Light	5

Connecting cable:

Not used (mechanical)	00
Coiled, 1,5 m, jack plug (easy)	WR

Options:

None	000
Customer-specific	*KKK*
Potentiometer	*EXY*
Mains cable feedthrough	*EYF*
Cable feedthrough	*EYL*
Mains cable feedthrough, potentiometer	*2CH*
Cable feedthrough, potentiometer	*2CJ*
Cable and mains cable feedthrough,	*2CL*
Cable and mains cable feedthrough, potentiometer	*3CG*

Stroke (S):

250 mm	*250*
300 mm	300
350 mm	*350*
400 mm	400
450 mm	*450*
500 mm	500
550 mm	*550*
600 mm	600
650 mm	*650*
700 mm	700

Options written in italic fonts are not available as standard. Please contact SKF for verification.

Notes

TELESMART

This cost effective telescopic pillar offers an attractive design for height adjustable desks, tables, chairs and lightweight industrial workstations. The TXG series has an integrated control unit and combines the advantages of AC and DC power. The TMA & TMD series are very stylish and ideal for office environment. The pillars can be controlled by using desk, hand or foot switches.



Benefits

- Easy plug and play system
- Powerful and fast lifting
- Aesthetic design
- Cost effective

Type	Force push	pull	Max. speed no load	full load	Stroke (S)	Retr. length (L)	Voltage	Protection class	Weight
	N	N	mm/s	mm/s	mm	mm	V AC/DC	IP	kg
TMD	800	0	60	35	700	550	24 DC	20	8,5
TMA	1 000	0	55	35	500	640	24 DC	20	8
TXG 1	1 500	0	23	17	200-600	S+160/180	24 DC	30	8-13
TXG 4/5	1 500	0	23	17	200-600	S+160/180	120 AC	30	9-14
TXG 8/9	1 500	0	23	17	200-600	S+160/180	230 AC	30	9-14

Telescopic pillars
TELESMART TMD

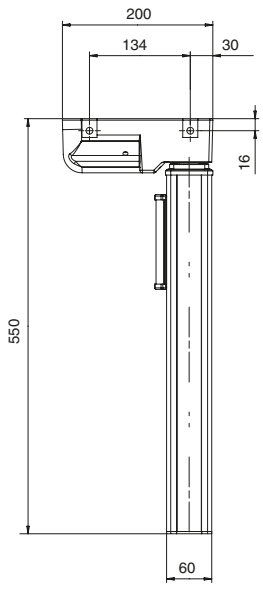

Type	Force push	pull	Speed no load	full load	Stroke (S)	Retr. length (L)	Voltage	Protection class	Weight
	N	N	mm/s	mm/s	mm	mm	VDC	IP	kg
TMD	800	0	60	35	700	550	24	20	8,5

Type code for accessories

Accessories	Order N °
Cable 1,0 m with DIN8-plug	306355-1000
Cable 1,5 m with DIN8-plug	306355-1500
Cable 2,5 m with DIN8-plug	306355-2500

TMD10-00 □ □□□-70000

Type

Colour/Design:
Natural anodized coating 5
Black anodized coating 6

Options:
With flange for crossbar one side EWY
With flange for crossbar two sides 2CM
No flange for crossbar 2CN

Options written in BLUE text are included in the Easy Range concept, which is our special service range for quick delivery from stock.
A type key made with ALL POSITIONS in BLUE qualifies a product for this service.

Telescopic pillars
TELESMART TMA

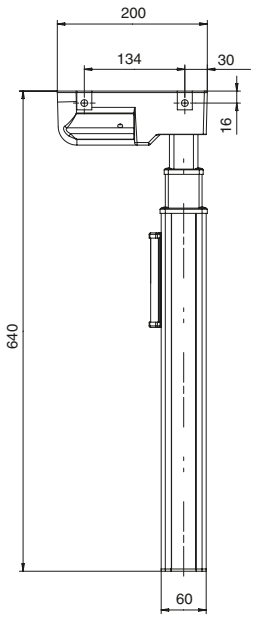

Type	Force push	pull	Speed no load	full load	Stroke (S)	Retr. length (L)	Voltage	Protection class	Weight
	N	N	mm/s	mm/s	mm	mm	VDC	IP	kg
TMA	1 000	0	55	35	500	640	24	20	8

Type code for accessories

Accessories	Order N °
Cable 1,0 m with DIN8-plug	306355-1000
Cable 1,5 m with DIN8-plug	306355-1500
Cable 2,5 m with DIN8-plug	306355-2500

TMA10-00□□□-50000

Type

Colour/Design:

Natural anodized coating	5
Black anodized coating	6

Options:

With flange for crossbar one side	EWY
With flange for crossbar two sides	2CM
No flange for crossbar	2CN

Options written in BLUE text are included in the Easy Range concept, which is our special service range for quick delivery from stock.
A type key made with ALL POSITIONS in BLUE qualifies a product for this service.

Telescopic pillars
TELESMART TXG

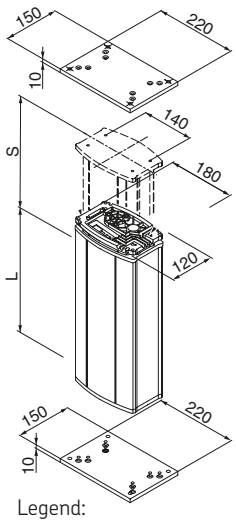

Legend:
S = stroke
L = retracted length

Type	Force push	pull	Speed no load	full load	Stroke (S)	Retr. length (L)	Voltage	Protection class	Weight
	N	N	mm/s	mm/s	mm	mm	V AC/DC	IP	kg
TXG 1	1 500	0	23	17	200-600	S+180/160	24 DC	30	8-13
TXG 4/5	1 500	0	23	17	200-600	S+180/160	120 AC	30	9-14
TXG 8/9	1 500	0	23	17	200-600	S+180/160	230 AC	30	9-14

Type code for accessories

Mains cable	Plug	Country	Order number	Comment
Straight cable 3,5	Euro	General	304330	2-pole
Straight cable 3,5	Schuko	DE	304331	2-pole
Straight cable 3,5	UL	USA	304332	2-pole
Straight cable 3,5	British standard	UK	304333	2-pole
Top or bottom mounting plate			304338	

T X G □ □ - 00 □ □ - □ □ 00

Type

Motor voltage:

24 VDC (slave actuator)	1
120 VAC, 50/60 Hz, class II	4
120 VAC, 50/60 Hz, class I (mandatory for cable feedthrough)	5
230 VAC, 50 Hz, class II	8
230 VAC, 50 Hz, class I (mandatory for cable feedthrough)	9

Output for an additional DC Motor:

Not used (Stand alone)	0
24 VDC (Master, not available for TXG1)	1

Colour:

Natural anodized coating	5
Customer-specific	*K*
Powder-coated white RAL 9010	*2*
Powder-coated grey RAL 7035	*3*

Options (*24 VDC, **230/120 VAC with anti-pinching protection)

None	000
Customer-specific	*KKK*
Control connection feedthrough**	EYK
Mains cable feedthrough**	EYF
Encoder for TXG*	EYS
Encoder for other controls*	EXG
Retract, memory**	2CA
Control connection feedthrough**, mains cable feedthrough**	2AA
Retract, memory**, mains cable feedthrough**	3AW
Control connection feedthrough **, retract, memory**	3AY
Control connection feedthrough **, retract, memory**, mains cable feedthrough**	4AG
Extend, retract, memory**, parallel operation of 2 actuators**	4AL
Extend, retract, memory**, parallel operation of 2 actuators**, mains cable feedthrough**	5AA
Extend, retract, memory**, parallel operation of 2 actuators**, control connection feedthrough**	5AC
Extend, retract, memory**, parallel operation of 2 actuators**, control/mains cable feedthrough**	6AA

Stroke (S)/Retr.length (L=S+180 or 160 mm)

	L=S+180	L=S+160
200 mm	200	*4CY*
300 mm	300	*4DY*
400 mm	400	*4EY*
500 mm	500	*4FY*
600 mm	600	*4GV*

Options written in BLUE text are included in the Easy Range concept, which is our special service range for quick delivery from stock.
A type key made with ALL POSITIONS in BLUE qualifies a product for this service.
Options written in italic fonts are not available as standard. Please contact SKF for verification.

MAGGEAR

With a stroke of 200 mm the MAGGEAR is especially suitable to adjust sit-sit workstations. Consisting of a small, strong 24 VDC motor, a gear with spindle and a push tube, the MAGGEAR can be directly integrated into most table legs.



Benefits

- Small and slim
- In-line layout
- Low cost

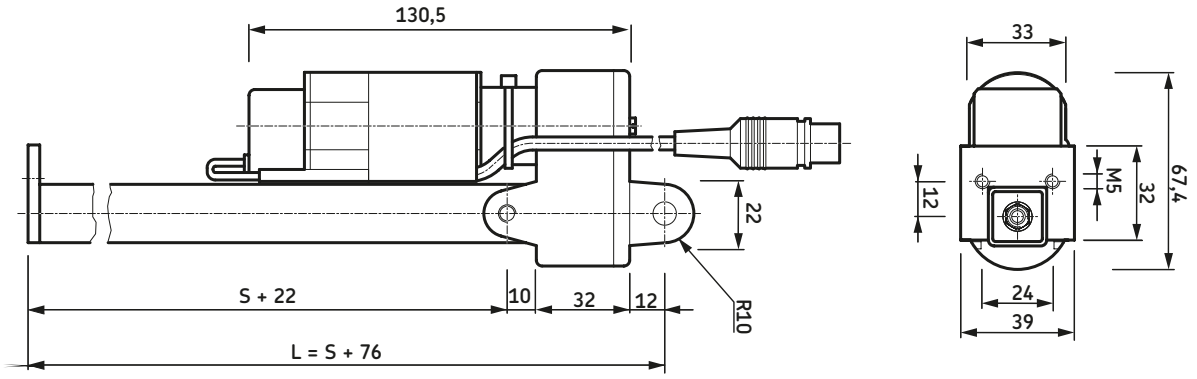

Type code

E T E 815 201

Type	Force push	pull	Max. speed no load	Max. speed full load	Stroke (S)	Retr. length (L)	Voltage	Protection class	Weight
	N	N	mm/s	mm/s	mm	mm	VDC	IP	kg
ETE	800	200	8	8	200	276	24	X0	1,0

Notes

Linear actuators



CAT

The CAT modular design concept makes it easy to interchange critical components such as motors, gears, screws, attachments, etc. Custom built actuators are easily and cost efficiently built from standard parts. The CAT range flexibility makes it suitable for a virtually infinite number of applications.

Benefits

- Small
- Robust
- Highly efficient
- Lubricated for service life

More information is available in publication 6162

Type	Force push	pull	Max. speed no load	full load	Stroke (S)	Retr. length* (L)	Voltage	Protection class	Weight
	N	N	mm/s	mm/s	mm	mm	V AC/DC	IP	kg
CAT 33H	1 200	1 200	174	150	100-400	S+150/158/189	12/24 DC 120/230/400 AC	20/44/54/65	2-2,7
CAT 33	3 000	3 000	48	38	100-400	S+150/158/189	12/24 DC 120/230/400 AC	20/44/54/65	2-2,7
CAT 32B	4 000	4 000	67	50	50-700	S+167/175/206	12/24 DC 120/230/400 AC	20/44/54/65	2-3,5
CAT 21B	600	600	10	5	50- 300	S+100	12/24 DC	X4	0,7-1,5

*Dimension depends on selected front attachment.

CAT 33H

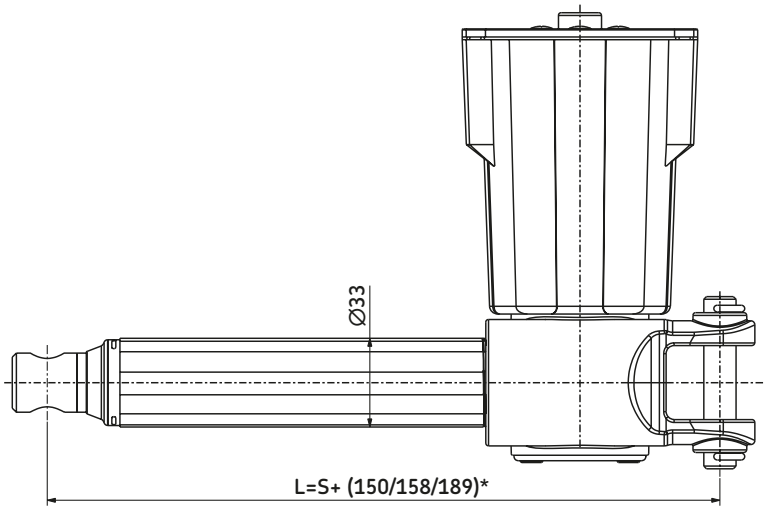

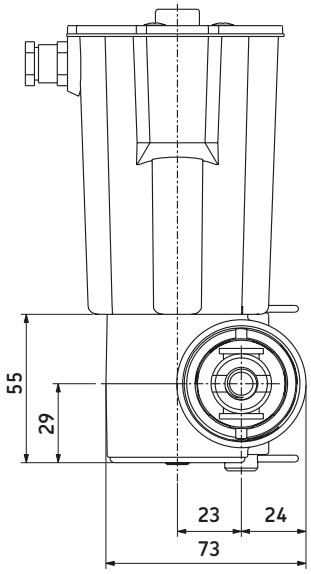

Legend:
S = stroke
L = retracted length

See drawings of front and rear attachments and motor options on page 42

Type	Force push	pull	Max. speed no load	full load	Stroke (S)	Retr. length* (L)	Voltage	Protection class	Weight
	N	N	mm/s	mm/s	mm	mm	V AC/DC	IP	kg
CAT 33H	1 200	1 200	174	150	100-400	S+150/158/189	12/24 DC 120/230/400 AC	20/44/65 20/54/55	2-2,7

*Dimension depends on selected front attachment.

Type key

Dynamic load (N)/Speed (mm/s)			Motor options	
1 200/xx	900/xx	600/xx	No motor	0000
10 00/50-38	600/100-80	400/174-150	12 VDC, IP44 (65)	C12C
10 00/50-38	600/100-80	400/174-150	12 VDC, flat motor, IP44	D12C
12 00/56-36	900/113-79	500/174-140	24 VDC, IP44 (65)	C24C
12 00/27-17	800/60-35	500/100-69	24 VDC, low speed, IP44 (65)	C24CW
12 00/56-36	900/113-79	500/174-140	24 VDC, flat motor, IP44	D24C
12 00/56-36	900/113-79	500/174-140	24 VDC, flat motor, brake, IP20	D24CB
12 00/56-36	900/113-79	500/174-140	24 VDC, flat motor, ext. shaft, IP44	D24CS
12 00/27-17	800/60-35	500/100-69	24 VDC, flat motor, low speed, IP44	D24CW
12 00/20	900/37	600/90	120 VAC/60 Hz, brake, IP54	E110C (25mF)
12 00/20	900/37	600/90	120 VAC/60 Hz, brake, IP20	E110CB (25mF)
12 00/20	900/37	600/90	230 VAC/50 Hz, IP54	E220C
12 00/20	900/37	600/90	230 VAC/50 Hz, brake, IP20	E220CB
12 00/20	900/37	600/90	400 VAC/50 Hz, IP55	E380C
1	**2**	**4**		

C A T 33H X X /

Type

Motor assembly:
Right R
Left L

Stroke (S):
100 mm 100
200 mm 200
300 mm 300
400 mm 400
100<S<400 mm (S>400 mm contact SKF) - - -

Rear attachment (see page 42):
Fork ear, ∅=12,0 mm A1
Fork ear, ∅=12,7 mm A2
Single ear, ∅=12,0 mm K1
Single ear, ∅=12,7 mm K2

Front attachment (see page 42):
Hole, ∅=12,0 mm G1
Hole, ∅=12,7 mm G2
Male thread, M12 G3
Female thread, M12 G4
Fork ear, ∅=10,1 mm G5

Feed back
No encoder (no code)
Encoder (ony for CxxC motors) E
Encoder (for all standard motors) E2

Options:
Friction clutch F
No friction clutch Z

Options for CxxC motors:
No cable U
EMC filter M
Motor without cover N
IP65 (mandatory to state type of cable T2 or T2P) I
Straight cable, 2,0 m, no plug T2
Straight cable, 2,0 m, jack plug T2P

CAT 33

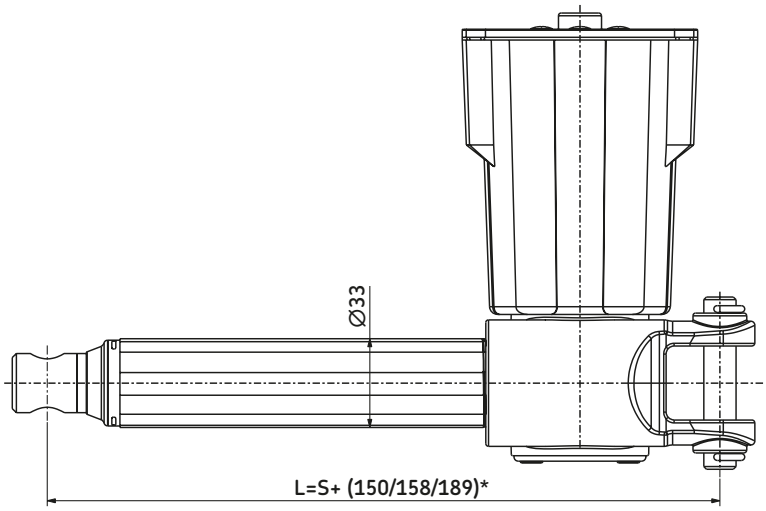

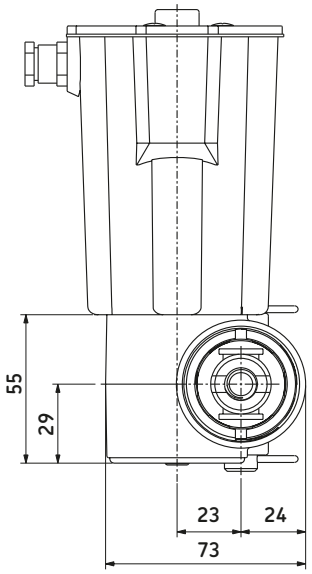

Legend:
S = stroke
L = retracted length

See drawings of front and rear attachments and motor options on page 42

Type	Force push	pull	Max. speed no load	full load	Stroke (S)	Retr. length* (L)	Voltage	Protection class	Weight
	N	N	mm/s	mm/s	mm	mm	V AC/DC	IP	kg
CAT 33	3 000	3 000	48	38	100-400	S+150/158/189	12/24 DC 120/230/400 AC	20/44/65 20/54/55	2-2,7

*Dimension depends on selected front attachment.

Type key

Dynamic load (N)/Speed (mm/s)			Motor options	
1 3000/xx	2 000/xx	1 000/xx	No motor	0000
3 000/13-10	2 000/24-20	1 000/48-38	12 VDC, IP44 (65)	C12C
2 400/11-7	1 600/21-15	800/39-21	12 VDC, flat motor, IP44	D12C
3 000/13-10	2 000/26-20	1 000/48-35	24 VDC, IP44 (65)	C24C
3 000/7-5	2 000/13-8	1 000/26-19	24 VDC, low speed, IP44 (65)	C24CW
3 000/13-10	2 000/26-20	1 000/48-35	24 VDC, flat motor, IP44	D24C
3 000/13-10	2 000/26-20	1 000/48-35	24 VDC, flat motor, IP44, ext. shaft	D24CS
3 000/7-5	2 000/13-8	1 000/26-19	24 VDC, flat motor, low speed, IP44	D24CW
2 400/6	1 600/12	800/24	120 VAC/60 Hz, IP54	E110C
2 400/6	1 600/12	800/24	120 VAC/60 Hz, brake, IP20	E110CB
3 000/5	2 000/10	1 000/20	230 VAC/50 Hz, IP54	E220C
3 000/5	2 000/10	1 000/20	230 VAC/50 Hz, brake, IP20	E220CB
3 000/5	2 000/10	1 000/20	400 VAC/50 Hz, IP55	E380C
1	2	4		

C A T 33 X X /

Type

Motor assembly:

Right	R
Left	L

Stroke (S):

100 mm	100
200 mm	200
300 mm	300
400 mm	400
100<S<400 mm (S>400 mm contact SKF)	- - -

Rear attachment (see page 42):

Fork ear, ∅=12,0 mm	A1
Fork ear, ∅=12,7 mm	A2
Single ear, ∅=12,0 mm	K1
Single ear, ∅=12,7 mm	K2

Front attachment (see page 42):

Hole, ∅=12,0 mm	G1
Hole, ∅=12,7 mm	G2
Male thread, M12	G3
Female thread, M12	G4
Fork ear, ∅=10,1 mm	G5

Feed back

No encoder (no code)	
Encoder (ony for CxxC motors)	E
Encoder (for all standard motors)	E2

Options:

Friction clutch	F
No friction clutch	Z

Options for CxxC motors:

No cable	U
EMC filter	M
Motor without cover	N
IP 65 (mandatory to state type of cable T2 or T2P)	I
Straight cable, 2,0 m, no plug	T2
Straight cable, 2,0 m, jack plug	T2P

Options written in BLUE text are included in the Easy Range concept, which is our special service range for quick delivery from stock.
A type key made with ALL POSITIONS in BLUE qualifies a product for this service.

CAT 32B

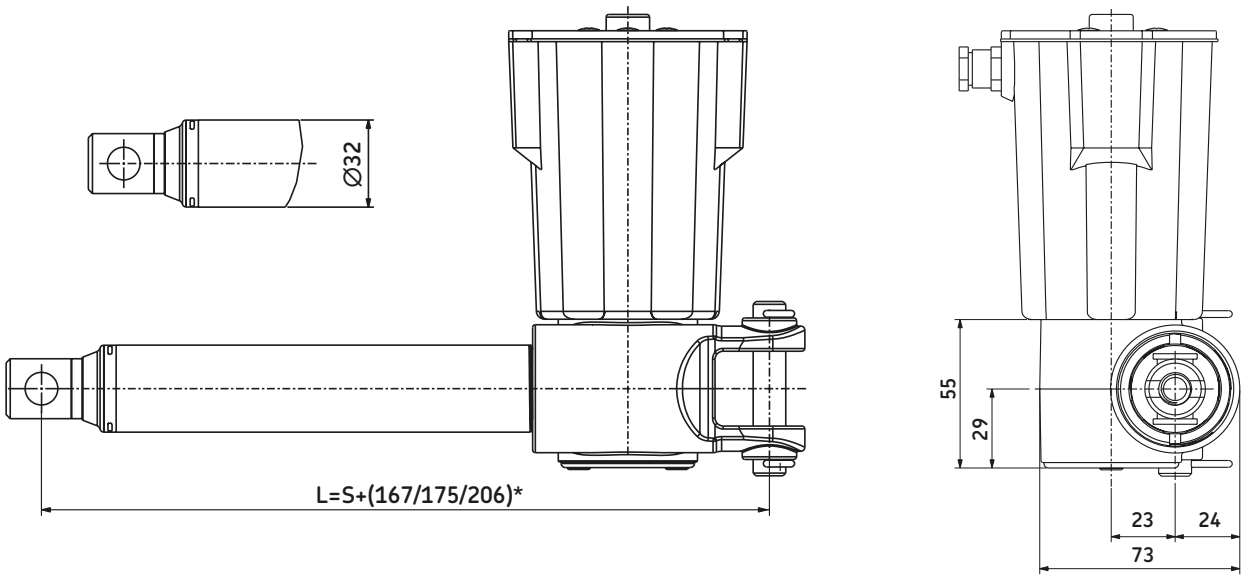

Legend:
S = stroke
L = retracted length

See drawings of front and rear attachments and motor options on page 42

Type	Force push	pull	Max. speed no load	full load	Stroke (S)	Retr. length* (L)	Voltage	Protection class	Weight
	N	N	mm/s	mm/s	mm	mm	V AC/DC	IP	kg
CAT 32B	4 000	4 000	67	50	50-700	S+167/175/206	12/24 DC 120/230/400 AC	20/44/65 20/54/55	2-3,5

*Dimension depends on selected front attachment.

Type key

Dynamic load (N)/Speed (mm/s)			Motor options	
4 000/xx	2 500/xx	1 500/xx	No motor	0000
4 000/17-12	2 500/32-25	1 500/63-48	12 VDC, IP44 (65)	C12C
3 000/17-11	2 000/34-19	1 000/67-43	12 VDC, flat motor, IP44	D12C
4 000/17-13	2 500/33-24	1 500/65-50	24 VDC, IP44 (65)	C24C
4 000/9-5	2 500/18-10	1 500/34-24	24 VDC, low speed motor, IP44	C24CW
4 000/17-13	2 500/33-24	1 500/65-50	24 VDC, flat motor, IP44	D24C
4 000/17-13	2 500/33-24	1 500/65-50	24 VDC, flat motor, brake, IP20	D24CB
4 000/17-13	2 500/33-24	1 500/65-50	24 VDC, flat motor, ext.shaft, IP44	D24CS
4 000/9-5	2 500/18-10	1 500/34-24	24 VDC, flat motor, low speed, IP44	D24CW
3 500/8	2 100/16	1 300/32	120 VAC/60 Hz, IP54	E110C
3 500/8	2 100/16	1 300/32	120 VAC/60 Hz, brake, IP20	E110CB
3 500/6,5	2 100/13	1 300/26	230 VAC/50 Hz, IP54	E220C
3 500/6,5	2 100/13	1 300/26	230 VAC/50 Hz, brake, IP20	E220CB
3 500/6,5	2 100/13	1 300/26	400 VAC/50 Hz, IP55	E380C
1	2	4		

C A T 32B X X /

Type

Motor assembly:

Right	R
Left	L

Stroke (S):

50 mm	50
100 mm	100
200 mm	200
300 mm	300
400 mm	400
500 mm	500
700 mm	700
50<S<700 mm (S>700 mm contact SKF)	- - -

Rear attachment (see page 42):

Fork ear, ∅=12,0 mm	A1
Fork ear, ∅=12,7 mm	A2
Single ear, ∅=12,0 mm	K1
Single ear, ∅=12,7 mm	K2

Front attachment (see page 42):

Hole, ∅=12,0 mm	G1
Hole, ∅=12,7 mm	G2
Male thread, M12	G3
Female thread, M12	G4
Fork ear, ∅=10,1 mm	G5

Feed back

No encoder (no code)	
Encoder (ony for CxxC motors)	E
Encoder (for all standard motors)	E2

Options:

Friction clutch	F
No friction clutch	Z
Back-up ball nut	S

Options for CxxC motors:

No cable	U
EMC filter	M
Motor without cover	N
IP65 (mandatory to state type of cable)	I
Straight cable, 2,0 m, no plug	T2
Straight cable, 2,0 m, jack plug	T2P

Options written in BLUE text are included in the Easy Range concept, which is our special service range for quick delivery from stock.
A type key made with ALL POSITIONS in BLUE qualifies a product for this service.

Page with all detailed drawings of CAT 32B,CAT 33 and CAT 33H

Front attachments and retracted length

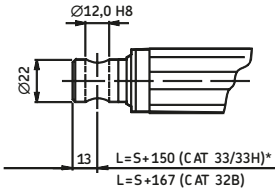

G1

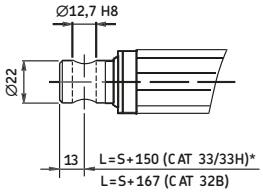

G2

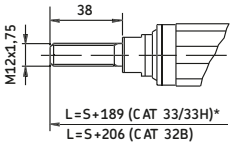

G3

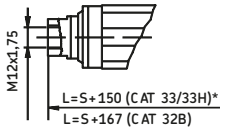

G4

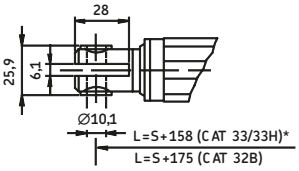

G5

Legend:
S = stroke
L = retracted length

*If S =400, add 50 mm to retracted length.

Motors

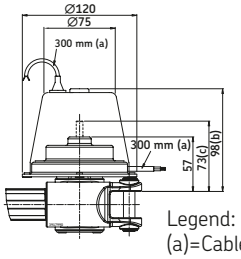

Legend:
(a)=Cable length
(b)=Cover for brake

D12C, D24C, D24CB, D24CS, D24CW

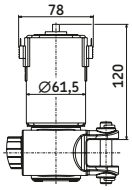

C12CN, C24CN, C24CWN

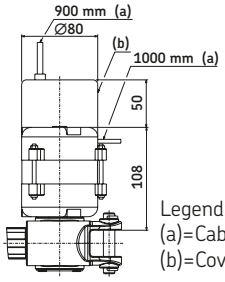

Legend:
(a)=Cable length
(b)=Cover for brake

E110C, E110CB, E220C, E220CB

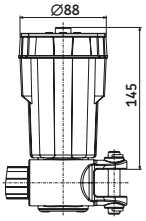

C12CM, C12CME, C24CM, C24CME, C24CWM, C24CWME

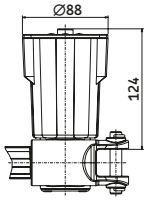

C12C, C24C, C24CW

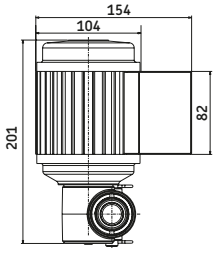

E380C

Rear attachments

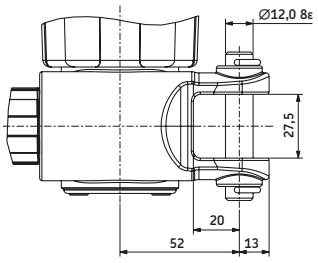

A1

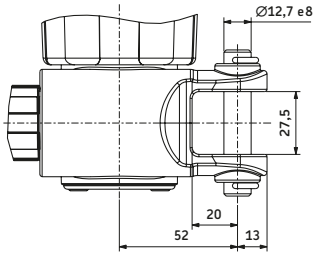

A2

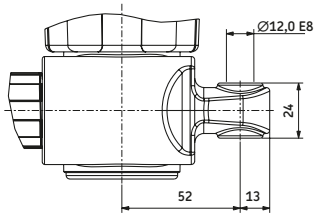

K1

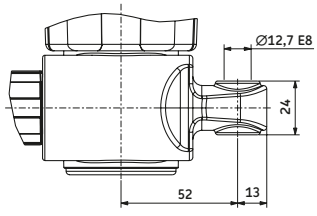

K2

Notes

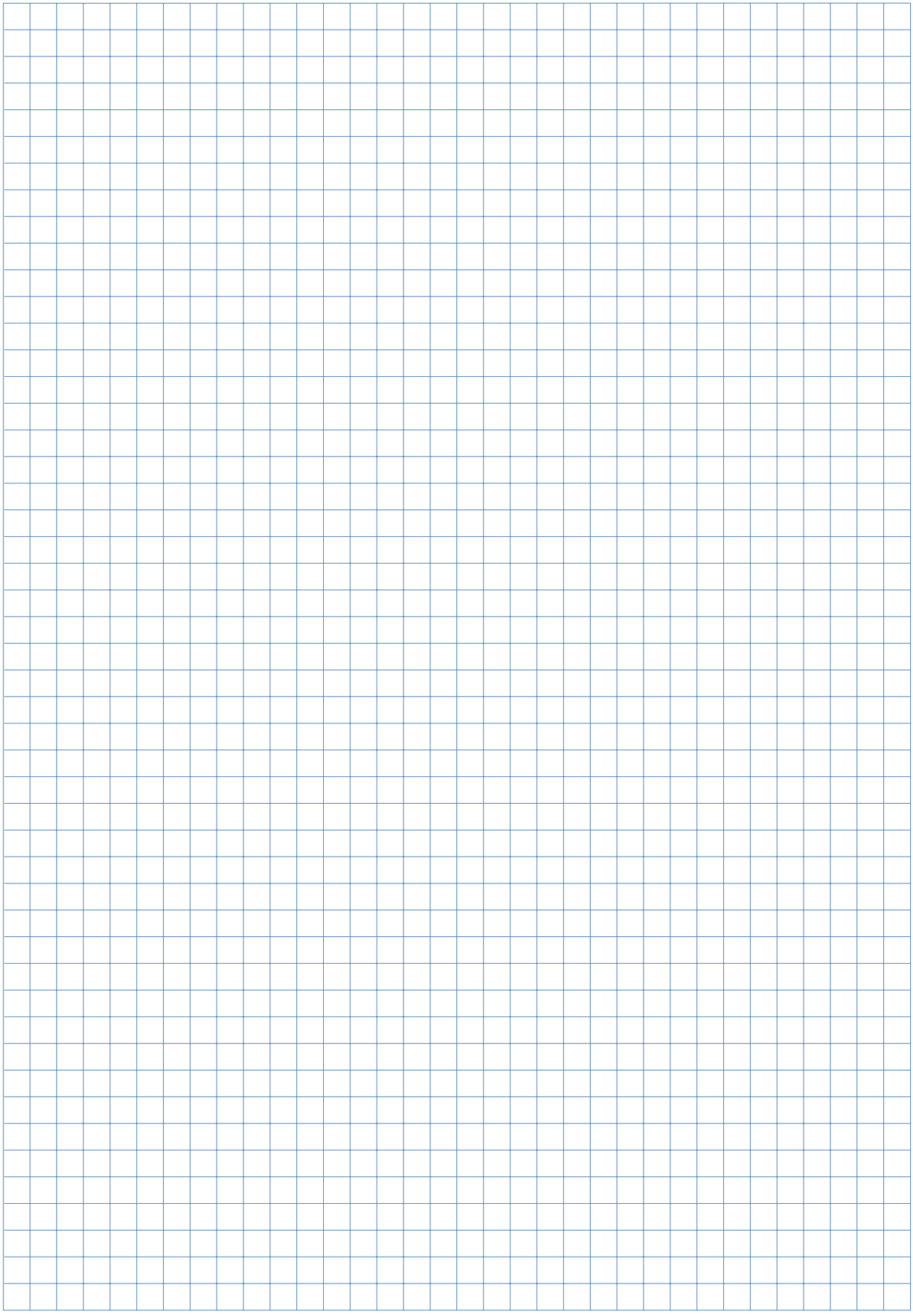

CAT 21B

The modular design concept of the CAT 21 actuator makes it easy to interchange critical components such as motors, screws, attachments etc. to build a custom actuator easily and cost effectively from a large inventory of standard parts. This flexibility makes it suitable for a virtually infinite number of product combinations to an equally infinite number of applications. This compact, yet robust, CAT 21 actuator is especially ideal for space limited applications. The maintenance-free design makes it cost effective while offering high operating reliability.

CAT 21 actuators feature large dynamic load capacities with low energy consumption while operating silently and efficiently over their full load range.

Benefits

- Compact design, (efficient and cost effective)
- Ball screw technology
- High operating reliability
- Low energy consumption
- Lubricated for service life
- Corrosion resistant
- Silent operation
- Range of front and rear attachments



Type	Force push	pull	Max. speed no load	full load	Stroke (S)	Retr. length* (L)	Voltage	Protection class	Weight
	N	N	mm/s	mm/s	mm	mm	VDC	IP	kg
CAT 21B	600	600	10	5	50-300	S +100	12/24	X4	0,7-1,5

Duty factors

	No load	50 % dynamic load	100 % dynamic
Duty factor:	50 %	20 %	10 %

Options

Standard options
Right or left handed motor orientation.
With or without motor cover.

Customer options (available on request)
Encoder and feedback options
Adjustable or fixed position limit switches
Special front and rear attachments
Special colors and gear house engravings
Special wiring and connectors
Special lead screws and nut combinations

If in any application there is a risk that the actuator mechanically runs into the end stop, we recommend that you use the limit switch option.

CAT 21B

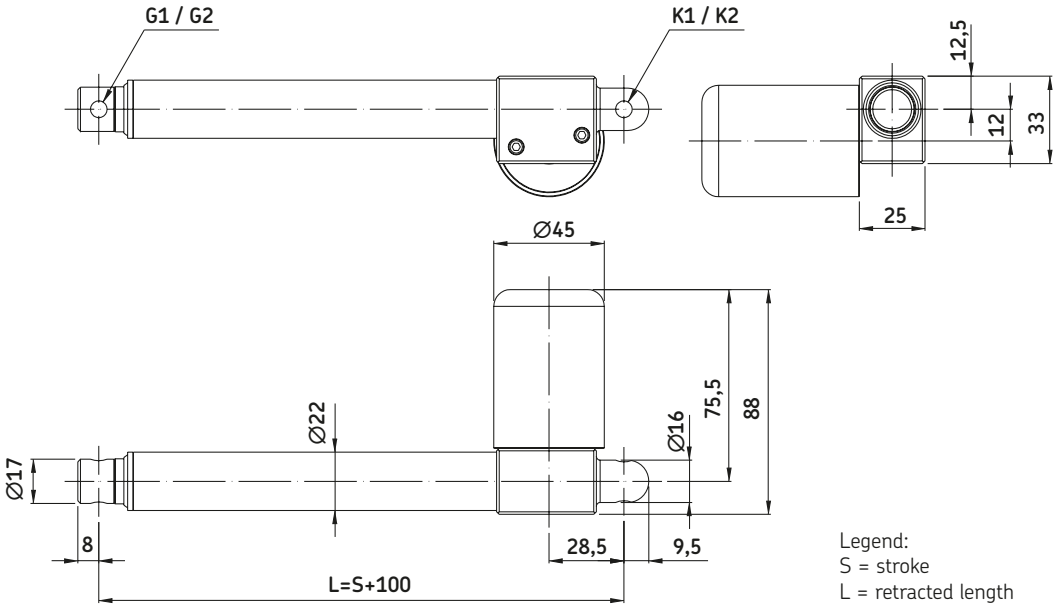

Legend:
S = stroke
L = retracted length

CAT 21B X [ ] X1 [ ] [ ] [ ] / [ ] [ ]

Type

Motor assembly:

Right	R
Left	L

Stroke (S):

50 mm	050
100 mm	100
200 mm	200
300 mm	300
0<S<300 mm (S>300 mm contact SKF)	---

Rear attachment:

Single ear, hole diameter 6,35 mm	K1
Single ear, hole diameter 8 mm	K2

Front attachment:

Hole diameter 6,35 mm	G1
Hole diameter 8 mm	G2

Options:

No friction clutch	Z

Motor options:

12 VDC	G12C
24 VDC	G24C

Options motors:

Cable, 1,6 m, with plug (jack plug, 1/4" 2-pole)	P
Cable, 1,6 m, no plug	T
Motor without cover	N
Encoder	E

CAP

The base for CAP positioning actuator series is the existing CAR linear actuator series and CAT modular range with a vast number of possibilities such as motors, front and rear attachments etc. Positioning accuracy and service life is ensured by detecting the position directly on the moving nut and by keeping the moving parts to a minimum.



Benefits

- Easy installation
- Robust and reliable
- Lubricated for service life
- Left and right hand versions

More information is available in publication 6162

Type	Force push	pull	Max. speed no load	full load	Stroke (S)	Retr. length* (L)	Voltage	Protection class	Weight
	N	N	mm/s	mm/s	mm	mm	V AC/DC	IP	kg
CAP 32	3 500	3 500	60	40	50-700	S+301	12/24 DC 120/230 AC	20/44/54	2,9-5,0
CAP 43A	3 000	3 000	48	35	100-400	S+150/158/189	24 DC	44/65	2,0-2,7
CAP 43B	4 000	4 000	65	50	50-700	S+167/175/206	24 DC	44/65	2,0-3,5

*Dimension depends on selected front attachment.

CAP 32

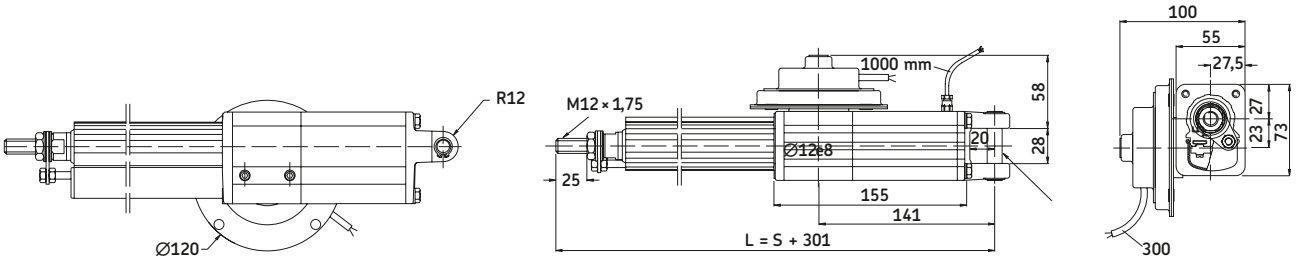

Legend:
S = stroke
L = retracted length

See drawings of front and rear attachments and motor options on page 50.

Type	Force push	pull	Max. speed no load	full load	Stroke (S)	Retr. length (L)	Voltage	Protection class	Weight
	N	N	mm/s	mm/s	mm	mm	V AC/DC	IP	kg
CAP 32	3 500	3 500	60	40	50-700	S+301	12/24 DC 120/230 AC	20/44/54	2,9-5,0

*Dimension depends on selected front attachment.

Dynamic load (N)/Speed (mm/s)			Motor options	
3 500/xx	2 500/xx	1 500/xx	No motor	0000
2 500/15-10	2 000/30-20	1 000/60-40	12 VDC, flat motor, IP44	D12C
3 500/15-10	2 500/30-20	1 500/60-40	24 VDC, flat motor, IP44	D24C
3 500/9-5	2 500/18-10	1 500/34-24	24 VDC, flat motor, low speed, IP44	D24CW
3 500/15-10	2 500/30-20	1 500/60-40	24 VDC, flat motor, extended shaft, IP44	D24CS
3 500/15-10	2 500/30-20	1 500/60-40	24 VDC, flat motor, brake, IP20	D24CB
3 500/8	2 500/16	1 500/32	120 VAC/60 Hz, single phase, IP54	E110C
3 500/8	2 500/16	1 500/32	120 VAC/60 Hz, single phase, brake, IP20	E110CB
3 500/6	2 500/13	1 500/26	230 VAC/50 Hz, single phase, IP54	E220C
3 500/6	2 500/13	1 500/26	230 VAC/50 Hz, single phase, brake, IP20	E220CB
1	2	4		

CAP 32 x x /

Type

Motor assembly:
Right R
Left L

Stroke (S):
50 mm 050
100 mm 100
200 mm 200
300 mm 300
500 mm 500
700 mm 700
50<S <700 mm (S>700 mm contact SKF) - - -

Options:
Back-up nut S

CAP 43A

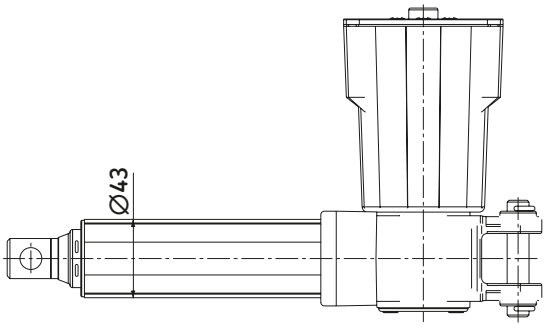

L=S+(150/158/189)*

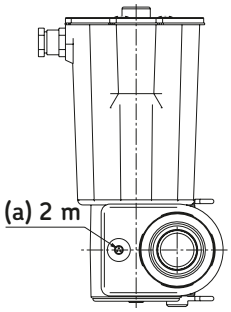

Legend: (a)=cable length

See drawings of front and rear attachments and motor options on page 50.

Type	Force push	pull	Max. speed no load	full load	Stroke (S)	Retr. length* (L)	Voltage	Protection class	Weight
	N	N	mm/s	mm/s	mm	mm	VDC	IP	kg
CAP 43A	3 000	3 000	48	35	100-400	S+150/158/189	24	44/65	2-2.7

*Dimension depends on selected front attachment.

Dynamic load (N)/Speed (mm/s)			Motor options	
3 000/xx	2 000/xx	1 000/xx	No motor	00000
3 000/7-5	2 000/13-8	1 000/26-19	24 VDC, IP44 (65)	C24CW
3 000/7-5	2 000/13-8	1 000/26-19	24 VDC, flat motor, low speed, IP44	D24CW
3 000/13-10	2 000/26-20	1 000/48-35	24 VDC, IP44 (65)	C24C
3 000/13-10	2 000/26-20	1 000/48-35	24 VDC, flat motor, IP44	D24C
1	2	4		

CAP 43A x x /

Type

Motor assembly:
Right R
Left L

Stroke (S):
100 mm 100
200 mm 200
300 mm 300
400 mm 400

Rear attachment (see page 50):
Fork ear, Ø=12,0 mm A1
Fork ear, Ø=12,7 mm A2
Single ear, Ø=12,0 mm K1
Single ear, Ø=12,7 mm K2

Front attachment (see page 50):
Hole, Ø=12,0 mm G1
Hole, Ø=12,7 mm G2
Male thread, M12 G3
Female thread, M12 G4
Fork ear, Ø=10,1 mm G5

Options:
Friction clutch F

Cable options for C24C(W)motors:
No cable U
Straight, 2,0 m T2

EMC filter M

Motor without cover N
Protection class IP65 (always order motor cable when selecting IP65) I

CAP 43B

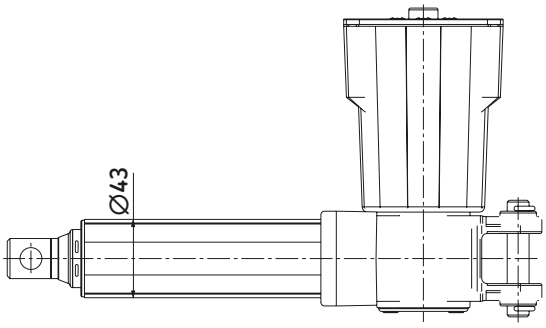

L=S+(167/175/206)*

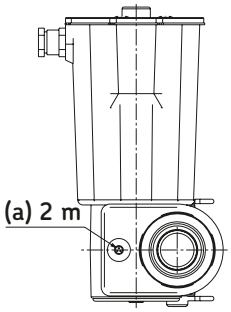

Legend: (a)=cable length

See drawings of front and rear attachments and motor options on page 50.

Type	Force push	pull	Max. speed no load	full load	Stroke (S)	Retr. length* (L)	Voltage	Protection class	Weight
	N	N	mm/s	mm/s	mm	mm	VDC	IP	kg
CAP 43B	4 000	4 000	65	50	50-700	S+167/175/206	24	44/65	2-3,5

*Dimension depends on selected front attachment.

Dynamic load (N)/Speed (mm/s)			Motor options	
4 000/xx	2 500/xx	1 500/xx	No motor	0000
4 000/17-13	2 500/33-24	1 500/65-50	24 VDC, IP44 (65)	C24C
4 000/9-5	2 500/18-10	1 500/34-24	24 VDC, low speed, IP44 (65)	C24CW
4 000/17-13	2 500/33-24	1 500/65-50	24 VDC, flat motor, IP44	D24C
4 000/9-5	2 500/18-10	1 500/34-24	24 VDC, flat motor, low speed, IP44	D24CW
1	2	4		

C A P [ ] 43B x [ ] x [ ] [ ] [ ] [ ] / [ ] [ ] [ ] [ ]

Type

Motor assembly:
Right R
Left L

Stroke (S):
50 mm 050
100 mm 100
200 mm 200
300 mm 300
400 mm 400
500 mm 500
700 mm 700

Rear attachment (see page 50):
Fork ear, Ø=12,0 mm A1
Fork ear, Ø=12,7 mm A2
Single ear, Ø=12,0 mm K1
Single ear, Ø=12,7 mm K2

Front attachment (see page 50):
Hole, Ø=12,0 mm G1
Hole, Ø=12,7 mm G2
Male thread, M12 G3
Female thread, M12 G4
Fork ear, Ø=10,1 mm G5

Options:
Friction clutch F
Back-up nut S

Cable options for C24C(W) motors:
No cable U
Straight, 2,0 m T2

EMC filter M

Motor without cover N
Protection class IP65 (always order motor cable when selecting IP65) I

Detailed drawings of attachments and motor options for CAP 43 and motor options for CAP 32.

Front attachments and retracted length (L)

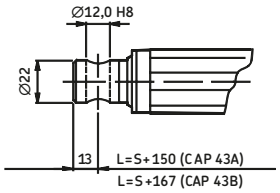

G1

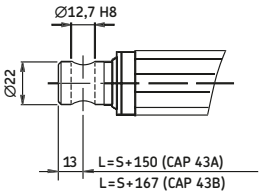

G2

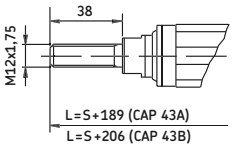

G3

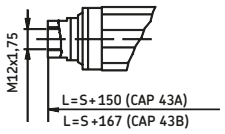

G4

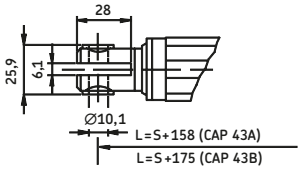

G5

Motor options CAP 43

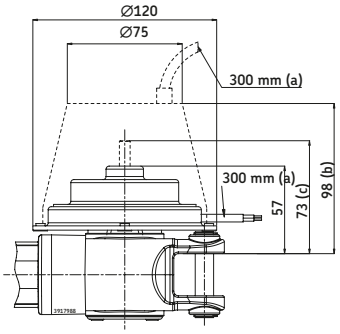

D24C, D24CW

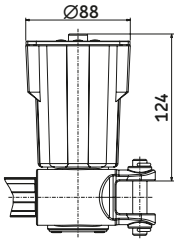

C24C, C24CW

Motor options CAP 32

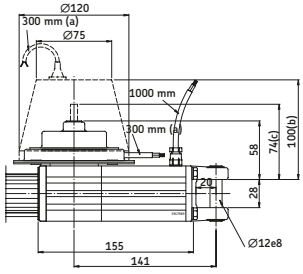

D12C/D24C/D24CW/D24CS/D24CB

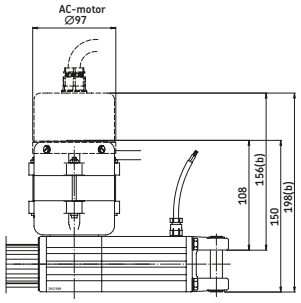

E110CB/E220CB/E110C/E220C

Rear attachments

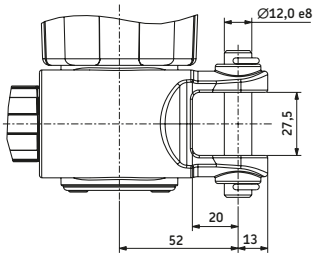

A1

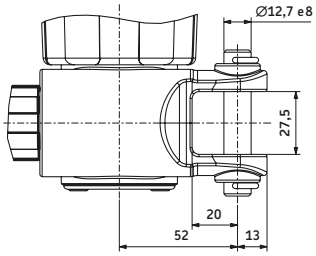

A2

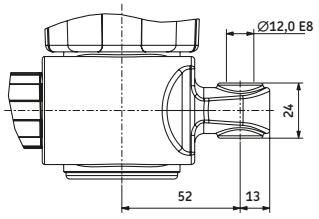

K1

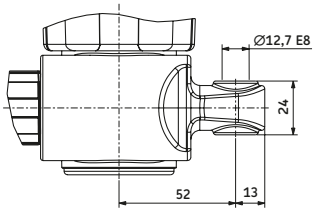

K2

Legend:
(a) = Cable length
(b) = Cover for brake (D24CB)
(c) = D24CS version
S = stroke
L = retracted length

Notes



CAR

The CAR range of industrial type actuators offers a unique standard of performance, durability, and reliability. The compact design incorporates well-proven parts, such as the SKF high efficiency ball screw, a sturdy gearbox assembly, and high quality DC and AC motors. All to give the best performance possible with extensive operational life. Individual application requirements can easily be matched thanks to the modular design concept.



Benefits

- Robust and reliable
- Long lifetime
- Wide component range
- Left and right hand versions

More information is available in publication 6162

Type	Force push	pull	Max. speed no load	full load	Stroke (S)	Retr. length* (L)	Voltage	Protection class	Weight
	N	N	mm/s	mm/s	mm	mm	V AC/DC	IP	kg
CAR 22	1 500	1 500	30	20	50-300	S+205	12/24 DC	44 1.	2-1.6
CAR 32	3 500	3 500	60	40	50-700	S+218	12/24 DC 120/230 AC	20/44/54	2,1-3,7
CAR 40	6 000	6 000	60	40	100-700	S+263	12/24 DC 120/230 AC	20/44/54	5,8-8,4
CARN 32	3 500	3 500	N/A	N/A	50-700	S+218	N/A	N/A	0,8-3,3
CCBR 32	2 500	2 500	N/A	N/A	50-700	S+177	N/A	N/A	1,1-1,5

*Dimension depends on selected front attachment.

CAR 22

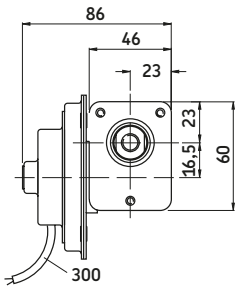

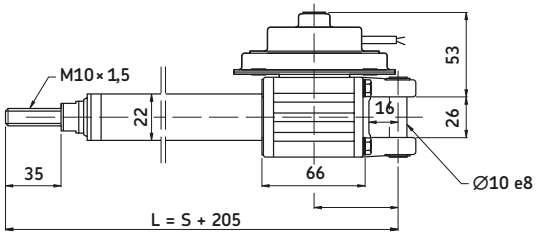

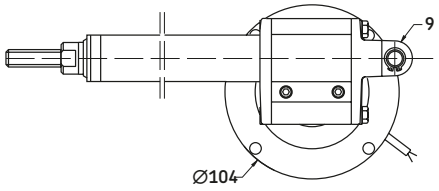

Legend:
S = stroke
L = retracted length

Type	Force push	pull	Max. speed no load	full load	Stroke (S)	Retr. length (L)	Voltage	Protection class	Weight
	N	N	mm/s	mm/s	mm	mm	VDC	IP	kg
CAR 22	1 500	1 500	30	20	50-300	S+205	12/24	44	1,2-1,6

Dynamic load (N) /Speed (mm/s)		Motor options	
1 500/xx	1 000/xx	No motor	0000
1 500/15-10	1 000/30-20	12 VDC, flat motor, IP44	D12B
1 500/15-10	1 000/30-20	24 VDC, flat motor, IP44	D24B
1	2		

C A R 22 X X /

Type

Motor assembly:

Right	R
Left	L

Stroke (S):

50 mm	050
100 mm	100
150 mm	150
200 mm	200
300 mm	300
50<S<300 (>300 mm contact SKF)	- - -

Options written in BLUE text are included in the Easy Range concept, which is our special service range for quick delivery from stock.
A type key made with ALL POSITIONS in BLUE qualifies a product for this service.

CAR 32

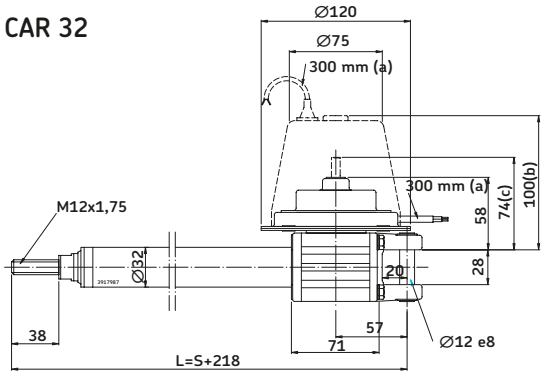

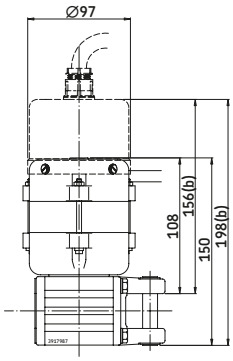

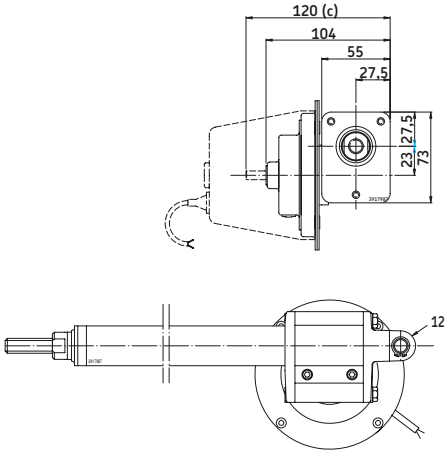

Legend:
S = stroke
L = retracted length

Type	Force push	pull	Max. speed no load	full load	Stroke (S)	Retr. length (L)	Voltage	Protection class	Weight
	N	N	mm/s	mm/s	mm	mm	V AC/DC	IP	kg
CAR 32	3 500	3 500	60	40	50-700	S+218	12/24 DC 120/230 AC	20/44/54	2,1-3,7

Dynamic load (N)/Speed (mm/s)			Motor options	
3 500/xx	2 500/xx	1 500/xx	No motor	0000
2 500/15-10	2 000/30-20	1 000/60-40	12 VDC, flat motor, IP44	D12C
3 500/15-10	2 500/30-20	1 500/60-40	24 VDC, flat motor, IP44	D24C
3 500/9-5	2 500/18-10	1 500/34-24	24 VDC, flat motor, low speed, IP44	D24CW
3 500/15-10	2 500/30-20	1 500/60-40	24 VDC, flat motor, extended shaft, IP44	D24CS
3 500/15-10	2 500/30-20	1 500/60-40	24 VDC, flat motor, brake, IP20	D24CB
3 500/8	2 500/16	1 500/32	120 VAC/60 Hz, single phase, IP54	E110C
3 500/8	2 500/16	1 500/32	120 VAC/60 Hz,single phase, brake, IP20	E110CB
3 500/6	2 500/13	1 500/26	230 VAC/50 Hz, single phase, IP54	E220C
3 500/6	2 500/13	1 500/26	230 VAC/50 Hz, single phase, brake, IP20	E220CB
1	2	4		

CAR 32 X X /

Type

Motor assembly:

Right	R
Left	L

Stroke (S):

50 mm	50
100 mm	100
200 mm	200
300 mm	300
500 mm	500
700 mm	700
50<S<700 mm (S>700 mm contact SKF)	- - -

Options:

Friction clutch	F
Back-up nut	S

Options written in BLUE text are included in the Easy Range concept, which is our special service range for quick delivery from stock.
A type key made with ALL POSITIONS in BLUE qualifies a product for this service.

CAR 40

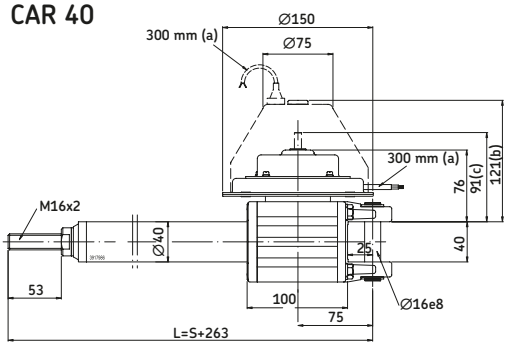

Legend:
S = stroke
L = retracted length

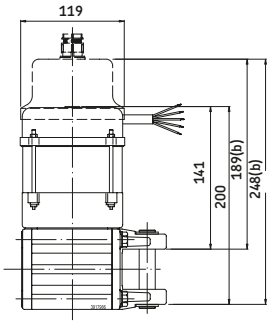

AC motor

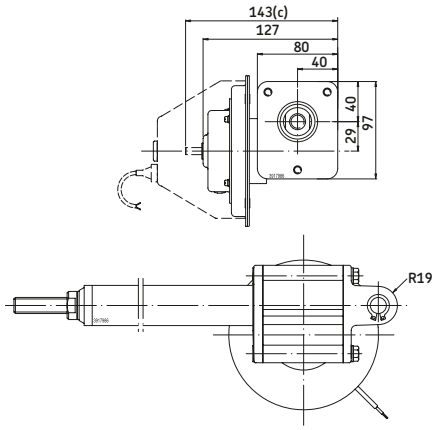

DC-motor

Type	Force push	pull	Max. speed no load	full load	Stroke (S)	Retr. length (L)	Voltage	Protection class	Weight
	N	N	mm/s	mm/s	mm	mm	V AC/DC	IP	kg
CAR 40	6 000	6 000	60	40	100-700	S+263	12/24 DC 120/230 AC	20/44/54	5,8-8,4

Dynamic load (N)/Speed (mm/s)			Motor options	
6 000/xx	4 000/xx	2 000/xx	No motor	0000
6 000/15-10	4 000/30-20	2 000/60-40	24 VDC, flat motor, IP44	D24D
6 000/15-10	4 000/30-20	2 000/60-40	24 VDC, flat motor, extended shaft, IP44	D24DS
6 000/15-10	4 000/30-20	2 000/60-40	24 VDC, flat motor, brake, IP20	D24DB
6 000/10	4 000/20	2 000/40	120 VAC/60 Hz, single phase, IP54	E110D
6 000/10	4 000/20	2 000/40	120 VAC/60 Hz, single phase, brake, IP20	E110DB
6 000/9	4 000/17	2 000/34	230 VAC/50 Hz, single phase, IP54	E220D
6 000/9	4 000/17	2 000/34	230 VAC/50 Hz, single phase, brake, IP20	E220DB
1	2	4		

CAR 40 X X /

Type

Motor assembly:
Right R
Left L

Stroke (S):
100 mm 100
300 mm 300
500 mm 500
700 mm 700
50<S<700 (S>700 mm contact SKF) - - -

Options:
Friction clutch F
Back-up nut S

Options written in BLUE text are included in the Easy Range concept, which is our special service range for quick delivery from stock.
A type key made with ALL POSITIONS in BLUE qualifies a product for this service.
Options written in italic fonts are not available as standard. Please contact SKF for verification.

CARN 32

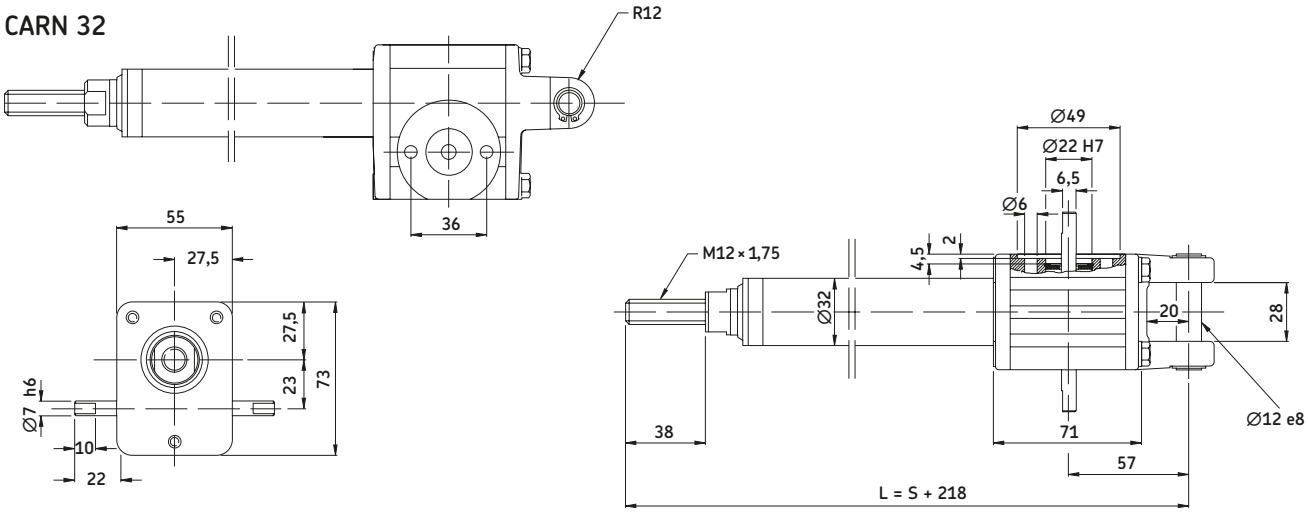

Legend:
S = stroke
L = retracted length

Type	Force push	pull	Max. speed no load	full load	Stroke (S)	Retr. length (L)	Voltage	Protection class	Weight
	N	N	mm/s	mm/s	mm	mm	V	IP	kg
CARN 32	3 500	3 500	N/A	N/A	50-700	S+218	N/A	N/A	0,8-3,3

CARN32X[ ]X[ ]/[ ]

Type

Stroke (S):	
50 mm	050
100 mm	100
200 mm	200
300 mm	300
500 mm	500
700 mm	700
50<S<700 mm (S>700 mm contact SKF)	- - -

Gear ratio:	
1:25	1
1:12,5 (max. force 2 500 N)	2
1:6,25 (max. force 1 500 N)	4

Options:	
Friction clutch	F
Back-up nut	S

CCBR 32

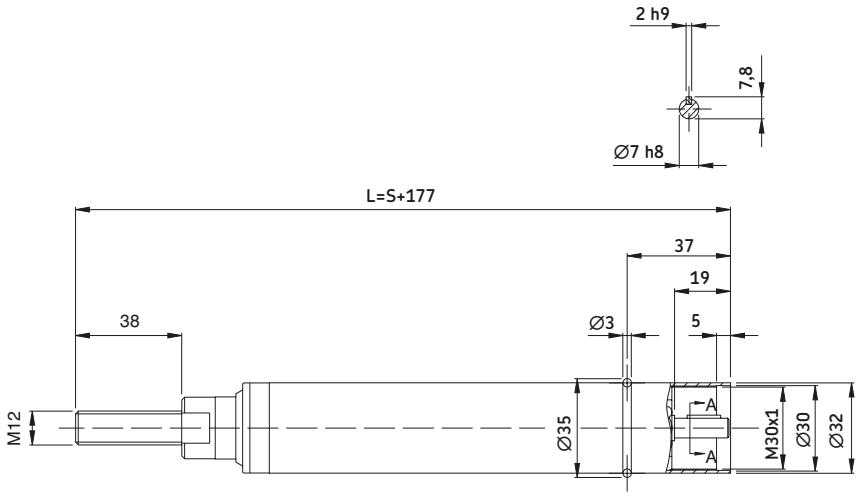

Legend:
S = stroke
L = retracted length

Type	Force push	pull	Max. speed no load	full load	Stroke (S)	Retr. length (L)	Voltage	Protection class	Weight
	N	N	mm/s	mm/s	mm	mm	V	IP	kg
CCBR 32	2 500	2 500	N/A	N/A	50-700	S+177	N/A	N/A	1,1-1,5

C C B R 32 X

Type

Stroke (S):

50 mm	050
100 mm	100
200 mm	200
300 mm	300
500 mm	500
700 mm	700
50<S<700 mm (S>700 mm contact SKF)	- - -

MAGFORCE

The MAGFORCE line consists of spindle lifting drives with worm gears. They fulfil the highest demands for industrial and other applications. The drives are available in several different motor versions. MAGFORCE offers strong, fast and quiet movements with high safety and duty cycles. The drives include many interface options such as hall encoder, end switch, extended shaft etc.

Benefits

- Ideal for heavy load applications
- Wide speed/force range
- Robust design



Type	Force push	pull	Max. speed no load	full load	Stroke (S)	Retr. length (L)	Voltage	Protection class	Weight
	N	N	mm/s	mm/s	mm	mm	V AC/DC	IP	kg
WSP 0510	500	500	68	57	100-700	S+230	230 AC	54	5,7
WSP 1030	1 000	1 000	23	19	100-700	S+230	230 AC	54	5,7
WSP 1550	1 500	1 500	13	11	100-700	S+230	230 AC	54	5,7
WSP 2650	2 600	2 600	7	5	100-700	S+230	230 AC	54	5,7
STW 5007	5 000	5 000	14	12	100-700	S+273	230 AC	54	14,6
STW 7010	7 000	7 000	10	8	100-700	S+273	230 AC	54	14,6
STW 10020	10 000	10 000	5	4	100-700	S+273	230 AC	54	14,6
STW 15040	15 000	15 000	2	2	100-700	S+273	230 AC	54	14,6
DSP 1010	1 000	1 000	62	52	100-700	S+230	3X400 AC	54	5,6
DSP 2530	2 500	2 500	20	17	100-700	S+230	3X400 AC	54	5,6
DSP 3250	3 200	3 200	12	10	100-700	S+230	3X400 AC	54	5,6
DSP 4550	4 500	4 500	6	5	100-700	S+230	3X400 AC	54	5,6
STD 10007	10 000	10 000	12	10	100-700	S+273	3X400 AC	54	16,3
SKD 10007	10 000	10 000	30	25	100-700	S+406	3X400 AC	54	14,6
SKD 12010	12 000	12 000	25	21	100-700	S+406	3X400 AC	54	14,6
STD 12010	12 000	12 000	9	8	100-700	S+273	3X400 AC	54	16,3
SKD 15020	15 000	15 000	13	11	100-700	S+406	3X400 AC	54	14,6
SKD 15040	15 000	15 000	6	5	100-700	S+406	3X400 AC	54	14,6
STD 15040	15 000	15 000	3	2	100-700	S+273	3X400 AC	54	16,3
STD 15020	15 000	15 000	5	4	100-700	S+273	3X400 AC	54	16,3
SK (S/A) 15404	15 000	15 000	54	45	100-700	S+465	3X400 AC	54	30,0
SLS 18006	18 000	18 000	88	74	100-700	S+446	3X400 AC	54	48,0
SK (S/A) 20406	20 000	20 000	41	34	100-700	S+465	3X400 AC	54	30,0
SK (S/A) 25412	25 000	25 000	20	17	100-700	S+465	3X400 AC	54	30,0
SK (S/A) 30423	30 000	30 000	11	10	100-700	S+465	3X400 AC	54	30,0
SLS 34013	34 000	34 000	43	36	100-700	S+446	3X400 AC	54	48,0
SLS 50020	50 000	50 000	27	23	100-700	S+446	3X400 AC	54	48,0
SLS 50028	50 000	50 000	19	16	100-700	S+446	3X400 AC	54	48,0
SLS 50050	50 000	50 000	11	9	100-700	S+446	3X400 AC	54	48,0
ASM 1010	1 000	1 000	58	48	100-700	S+230	12/24 DC	44	5,0
ASM 2030	2 000	2 000	22	18	100-700	S+230	12/24 DC	44	5,0
ASM 3030	3 000	3 000	10	8	100-700	S+230	12/24 DC	44	5,0
ASM 4050	4 000	4 000	6	5	100-700	S+230	12/24 DC	44	5,0
SKG 6005	6 000	6 000	66	55	100-700	S+406	24 DC	54	14,6
STG 10007	10 000	10 000	17	14	100-700	S+273	24 DC	54	14,6
SKG 10010	10 000	10 000	36	30	100-700	S+406	24 DC	54	14,6
STG 12010	12 000	12 000	13	11	100-700	S+273	24 DC	54	14,6
SKG 13020	13 000	13 000	18	15	100-700	S+406	24 DC	54	14,6
SKG 15040	15 000	15 000	10	8	100-700	S+406	24 DC	54	14,6
STG 15040	15 000	15 000	4	3	100-700	S+273	24 DC	54	14,6
STG 15020	15 000	15 000	6	5	100-700	S+273	24 DC	54	14,6

MAGFORCE WSP

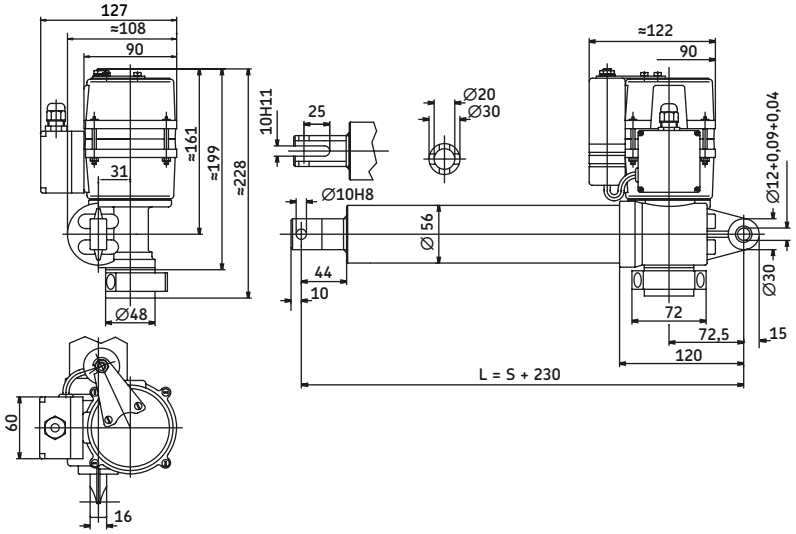

Legend:
S = stroke
L = retracted length

Type	Force push	pull	Max. speed no load	full load	Stroke (S)	Retr. length (L)	Voltage	Protection class	Weight
	N	N	mm/s	mm/s	mm	mm	VAC	IP	kg
WSP 0510	500	500	68	57	100-700	S+230	230	54	5,7
WSP 1030	1 000	1 000	23	19	100-700	S+230	230	54	5,7
WSP 1550	1 500	1 500	13	11	100-700	S+230	230	54	5,7
WSP 2650	2 600	2 600	7	5	100-700	S+230	230	54	5,7

Accessories	Order N°
Free wheel brake on push force	1028,6226
Free wheel brake on pull force	1028,0002
Friction brake for pull/push force	1028,7851
Mechanical end limit switch	1043,0209

W S P [ ] - [ ] - [ ]

Type

Load:

500 N	0510
1 000 N	1030
1 500 N	1550
2 600 N	2650

Stroke (S):

100 mm	100
200 mm	200
300 mm	300
400 mm	400
500 mm	500
600 mm	600
700 mm	700

Customer options:

Standard	01
Additional bushing (L=S+280 mm)	15
Extended shaft	16
Protection tube made out of stainless steel	30
Extended shaft	91
Others (rear attachment hole turned 90°, motor turned 90°, potentiometer...)	XX

Options written in BLUE text are included in the Easy Range concept, which is our special service range for quick delivery from stock.
A type key made with ALL POSITIONS in BLUE qualifies a product for this service.

MAGFORCE ASM

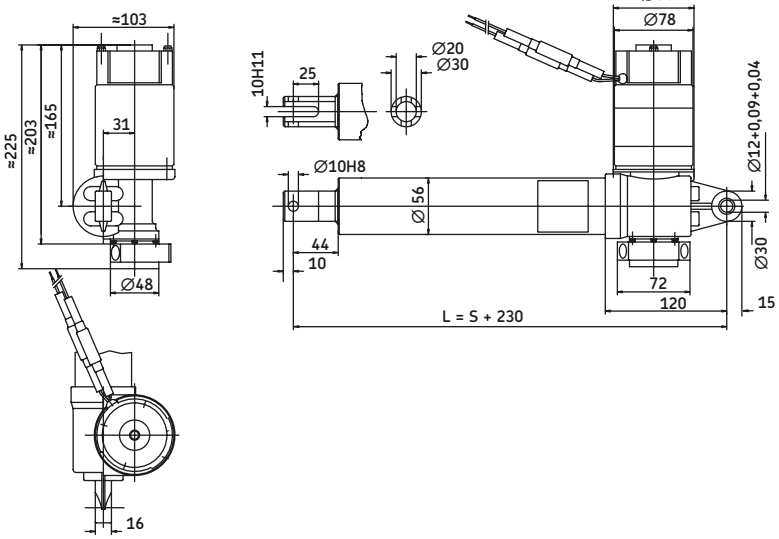

Legend:
S = stroke
L = retracted length

Type	Force push	pull	Max. speed no load	full load	Stroke (S)	Retr. length (L)	Voltage	Protection class	Weight
	N	N	mm/s	mm/s	mm	mm	VDC	IP	kg
ASM 1010	1 000	1 000	58	48	100-700	S+230	12/24	44	5,0
ASM 2030	2 000	2 000	22	18	100-700	S+230	12/24	44	5,0
ASM 3030	3 000	3 000	10	8	100-700	S+230	12/24	44	5,0
ASM 4050	4 000	4 000	6	5	100-700	S+230	12/24	44	5,0

Accessories	Order N°
Free wheel brake on push force	1028,6226
Free wheel brake on pull force	1028,0002
Friction brake for pull/push force	1028,7851
Mechanical end limit switch	1043,0210

ASM ____ - ____ - ____

Type

Load:

1 000 N	1010
2 000 N	2030
3 000 N	3030
4 000 N	4050

Stroke (S):

100 mm	100
200 mm	200
300 mm	300
400 mm	400
500 mm	500
600 mm	600
700 mm	700

Customer options:

12 VDC, standard	01
24 VDC, standard	02
24 VDC, additional bushing (L=S+280 mm)	05
24 VDC, bronze nut, special grease for -30 °C	07
24 VDC, protection tube made out of stainless steel	12
24 VDC, extended shaft	16
12 VDC, additional bushing (L=S+280 mm)	19
Others (rear attachment hole turned 90°, motor turned 90°, potentiometer...)	XX

Options written in BLUE text are included in the Easy Range concept, which is our special service range for quick delivery from stock.
A type key made with ALL POSITIONS in BLUE qualifies a product for this service.

MAGFORCE DSP

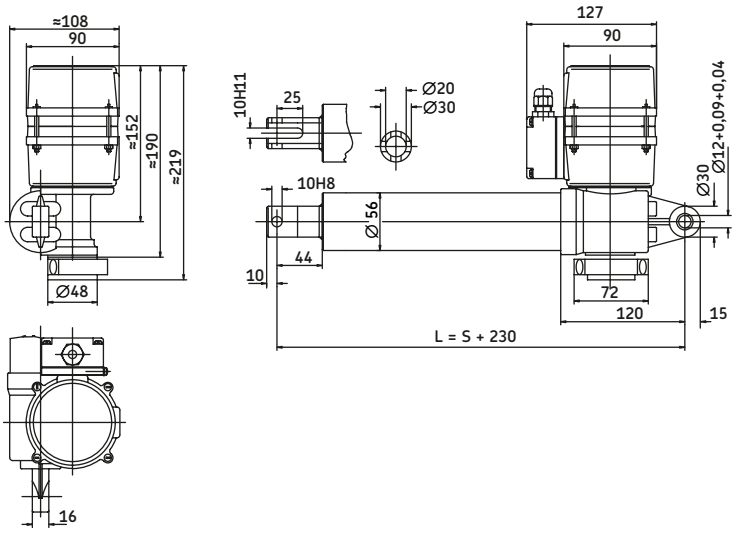

Legend:
S = stroke
L = retracted length

Type	Force push	pull	Max. speed no load	full load	Stroke (S)	Retr. length (L)	Voltage	Protection class	Weight
	N	N	mm/s	mm/s	mm	mm	VAC	IP	kg
DSP 1010	1 000	1 000	62	52	100-700	S+230	3x400	54	5,6
DSP 2530	2 500	2 500	20	17	100-700	S+230	3x400	54	5,6
DSP 3250	3 200	3 200	12	10	100-700	S+230	3x400	54	5,6
DSP 4550	4 500	4 500	6	5	100-700	S+230	3x400	54	5,6

Accessories	Order N°
Free wheel brake on push force	1028,6226
Free wheel brake on pull force	1028,0002
Friction brake for pull/push force	1028,7851
Mechanical end limit switch	1043,0210

D S P [ ] - [ ] - [ ]

Type

Load:

1 000 N	1010
2 500 N	2530
3 200 N	3250
4 500 N	4550

Stroke (S):

100 mm	100
200 mm	200
300 mm	300
400 mm	400
500 mm	500
600 mm	600
700 mm	700

Customer options:

Standard	01
Bronze nut, special grease for -30 °C	08
Additional bushing (L=S+280 mm)	09
Protection tube made out of stainless steel	14
Bronze nut, special grease for -30 °C, extended shaft	122
ATEX zone 22 (II 3 D T 150 °C)	131
Others (rear attachment hole turned 90°, motor turned 90°, potentiometer...)	XX

Options written in BLUE text are included in the Easy Range concept, which is our special service range for quick delivery from stock.
A type key made with ALL POSITIONS in BLUE qualifies a product for this service.

MAGFORCE SKG

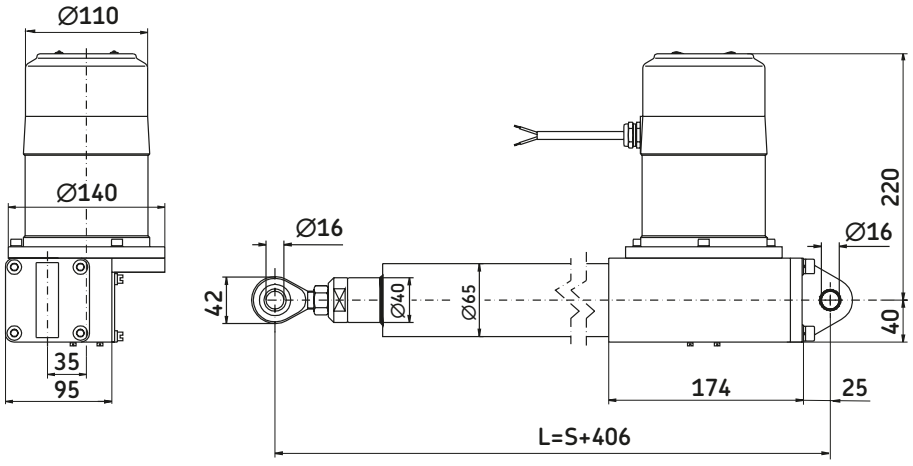

Legend:
S = stroke
L = retracted length

Type	Force push	pull	Max. speed no load	full load	Stroke (S)	Retr. length (L)	Voltage	Protection class	Weight
	N	N	mm/s	mm/s	mm	mm	VDC	IP	kg
SKG 6005	6 000	6 000	66	55	100-700	S+406	24	54	14,6
SKG 10010	10 000	10 000	36	30	100-700	S+406	24	54	14,6
SKG 13020	13 000	13 000	18	15	100-700	S+406	24	54	14,6
SKG 15040	15 000	15 000	10	8	100-700	S+406	24	54	14,6

SKG [ ] - [ ] - [ ]

Type

Load:

6 000 N	06005
10 000 N	10010
13 000 N	13020
15 000 N	15040

Stroke (S):

100 mm	100
200 mm	200
300 mm	300
400 mm	400
500 mm	500
600 mm	600
700 mm	700

Customer options:

Standard	01
Others (brake, limit switch, extended motor shaft, encoder, potentiometer,...)	*XX*

MAGFORCE SKD

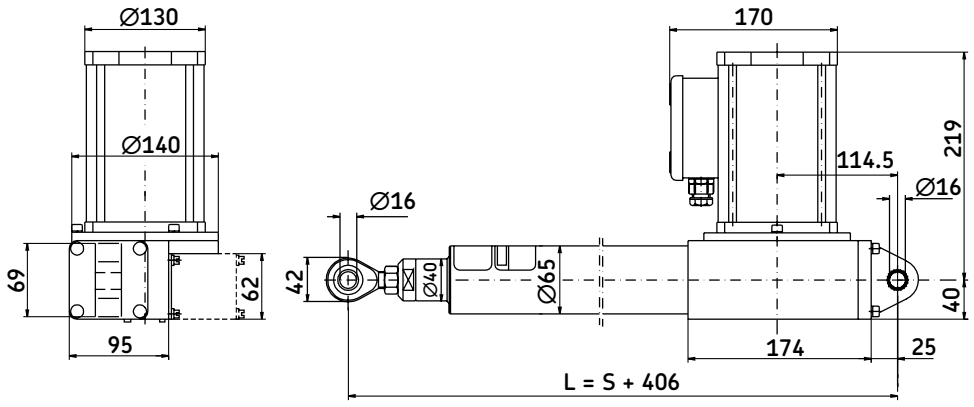

Legend:
S = stroke
L = retracted length

Type	Force push	pull	Max. speed no load	full load	Stroke (S)	Retr. length (L)	Voltage	Protection class	Weight
	N	N	mm/s	mm/s	mm	mm	VAC	IP	kg
SKD 10007	10 000	10 000	30	25	100-700	S+406	3x400	54	14,6
SKD 12010	12 000	12 000	25	21	100-700	S+406	3x400	54	14,6
SKD 15020	15 000	15 000	13	11	100-700	S+406	3x400	54	14,6
SKD 15040	15 000	15 000	6	5	100-700	S+406	3x400	54	14,6

SKD [ ] - [ ] - [ ]

Type

Load / Speed:

10 000 N	10007
12 000 N	12010
15 000 N / 11 mm/s	15020
15 000 N / 5 mm/s	15040

Stroke (S):

100 mm	100
200 mm	200
300 mm	300
400 mm	400
500 mm	500
600 mm	600
700 mm	700

Customer options:

Standard	01
Others (brake, limit switch, extended motor shaft, encoder, potentiometer,...)	*XX*

MAGFORCE STW

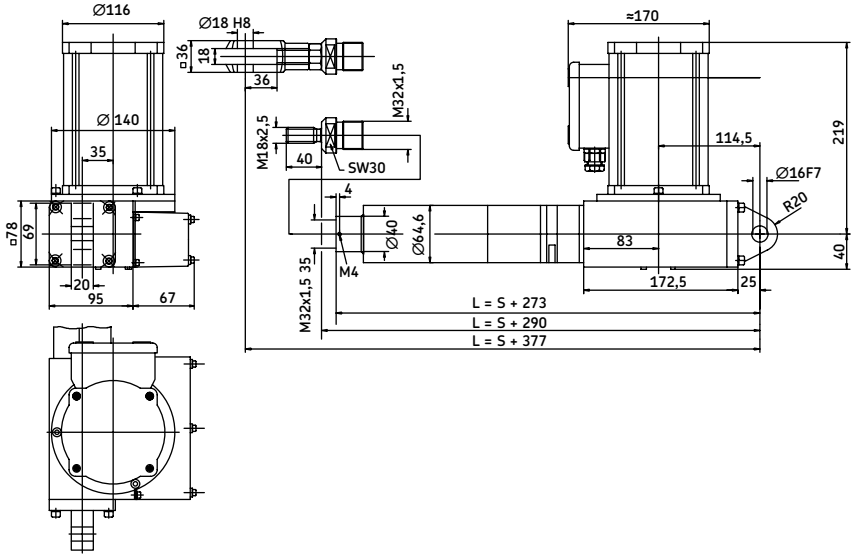

Legend:
S = stroke
L = retracted length

Type	Force push	pull	Max. speed no load	full load	Stroke (S)	Retr. length (L)	Voltage	Protection class	Weight
	N	N	mm/s	mm/s	mm	mm	VAC	IP	kg
STW 5007	5 000	5 000	14	12	100-700	S+273/290/377	230	54	14,6
STW 7010	7 000	7 000	10	8	100-700	S+273/290/377	230	54	14,6
STW 10020	10 000	10 000	5	4	100-700	S+273/290/377	230	54	14,6
STW 15040	15 000	15 000	2	2	100-700	S+273/290/377	230	54	14,6

STW [ ] - [ ] - [ ]

Type

Load:

5 000 N	05007
7 000 N	07010
10 000 N	10020
15 000 N	15040

Stroke (S):

100 mm	100
200 mm	200
300 mm	300
400 mm	400
500 mm	500
600 mm	600
700 mm	700

Customer options:

Standard	01
Limit switch	05
Low temperature grease	08
Others (brake, limit switch, extended motor shaft, encoder, potentiometer,...)	*XX*

Options written in BLUE text are included in the Easy Range concept, which is our special service range for quick delivery from stock.
A type key made with ALL POSITIONS in BLUE qualifies a product for this service.

MAGFORCE STG

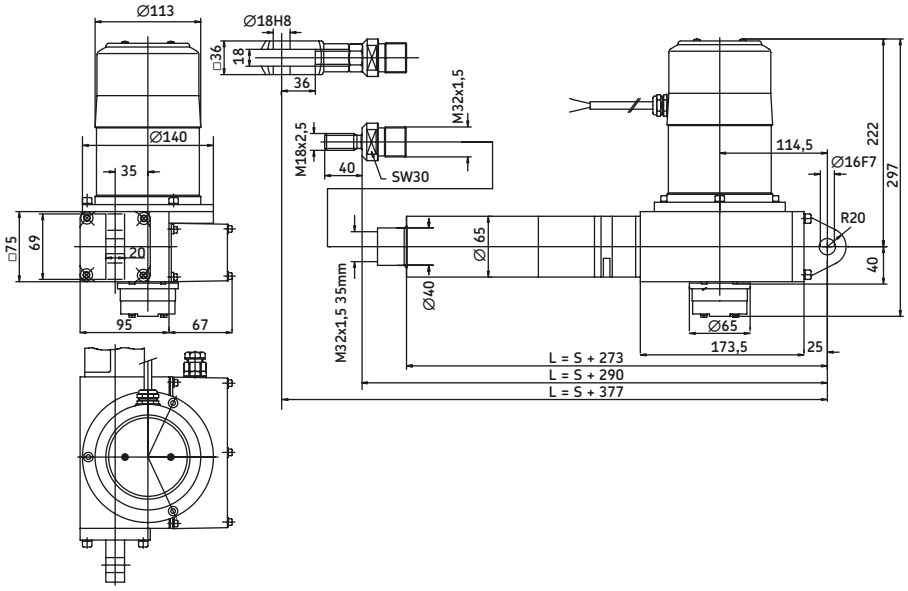

Legend:
S = stroke
L = retracted length

Type	Force push	pull	Max. speed no load	full load	Stroke (S)	Retr. length (L)	Voltage	Protection class	Weight
	N	N	mm/s	mm/s	mm	mm	VDC	IP	kg
STG 10007	10 000	10 000	17	14	100-700	S+273/290/377	24	54	14,6
STG 12010	12 000	12 000	13	11	100-700	S+273/290/377	24	54	14,6
STG 15020	15 000	15 000	6	5	100-700	S+273/290/377	24	54	14,6
STG 15040	15 000	15 000	4	3	100-700	S+273/290/377	24	54	14,6

S T G [ ] - [ ] - [ ]

Type

Load / Speed:

10 000 N	10007
12 000 N	12010
15 000 N / 5 mm/s	15020
15 000 N / 3 mm/s	15040

Stroke (S):

100 mm	100
200 mm	200
300 mm	300
400 mm	400
500 mm	500
600 mm	600
700 mm	700

Customer options:

Standard	01
Others (brake, limit switch, extended motor shaft, encoder, potentiometer,...)	*XX*

Options written in BLUE text are included in the Easy Range concept, which is our special service range for quick delivery from stock.
A type key made with ALL POSITIONS in BLUE qualifies a product for this service.

MAGFORCE STD

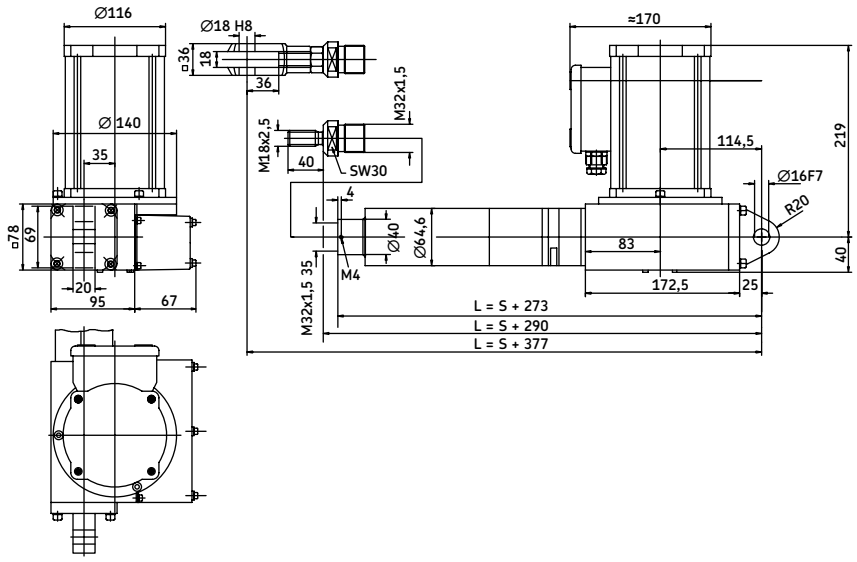

Legend:
S = stroke
L = retracted length

Type	Force push	pull	Max. speed no load	full load	Stroke (S)	Retr. length (L)	Voltage	Protection class	Weight
	N	N	mm/s	mm/s	mm	mm	VAC	IP	kg
STD 10007	10 000	10 000	12	10	100-700	S+273/290/377	3x400	54	16,3
STD 12010	12 000	12 000	9	8	100-700	S+273/290/377	3x400	54	16,3
STD 15020	15 000	15 000	5	4	100-700	S+273/290/377	3x400	54	16,3
STD 15040	15 000	15 000	3	2	100-700	S+273/290/377	3x400	54	16,3

S T D ☐ - ☐ - ☐

Type

Load / Speed:

10 000 N	10007
12 000 N	12010
15 000 N / 4 mm/s	15020
15 000 N / 2 mm/s	15040

Stroke (S):

100 mm	100
200 mm	200
300 mm	300
400 mm	400
500 mm	500
600 mm	600
700 mm	700

Customer options:

Standard	01
Extended shaft	11
Safety nut on push	13
Low temperature grease	19
Safety nut on push and pull	34
Others (brake, limit switch, extended motor shaft, encoder, potentiometer, ...)	*XX*

Options written in BLUE text are included in the Easy Range concept, which is our special service range for quick delivery from stock.
A type key made with ALL POSITIONS in BLUE qualifies a product for this service.

MAGFORCE SKS/SKA

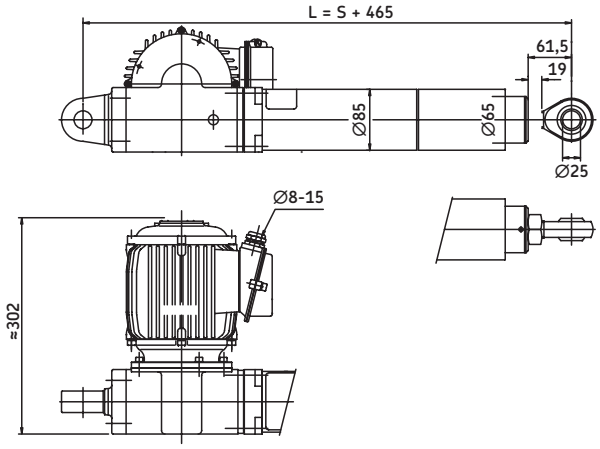

Legend:
S = stroke
L = retracted length

Type	Force push	pull	Max. speed no load	full load	Stroke (S)	Retr. length (L)	Voltage	Protection class	Weight
	N	N	mm/s	mm/s	mm	mm	VAC	IP	kg
SKS/SKA 15404	15 000	15 000	54	45	100-700	S+465	3x400	54	30,0
SKS/SKA 20406	20 000	20 000	41	34	100-700	S+465	3x400	54	30,0
SKS/SKA 25412	25 000	25 000	20	17	100-700	S+465	3x400	54	30,0
SKS/SKA 30423	30 000	30 000	11	10	100-700	S+465	3x400	54	30,0

SK		-		-	

Type

Option:

No option	S
With limit switches and/or potentiometer	A

Load:

15 000 N	15404
20 000 N	20406
25 000 N	25412
30 000 N	30423

Stroke (S):

100 mm	100
200 mm	200
300 mm	300
400 mm	400
500 mm	500
600 mm	600
700 mm	700

Customer options:

Standard	01
Others (extended motor shaf, back-up nut ...)	*XX*

MAGFORCE SLS

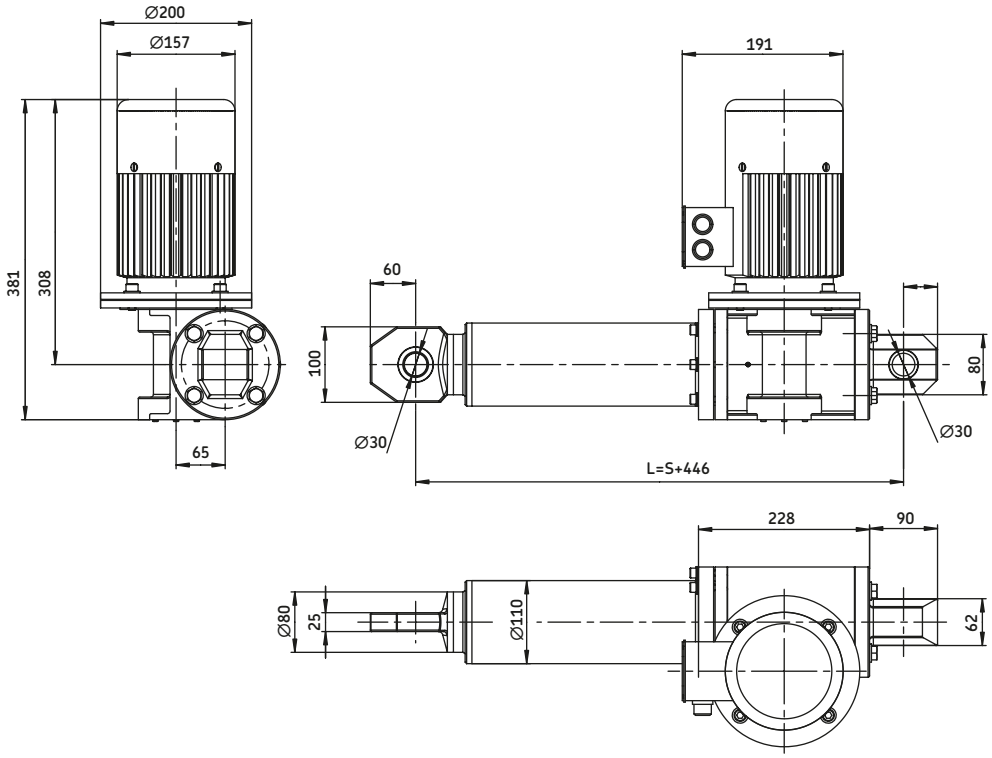

Legend:
S = stroke
L = retracted length

Type	Force push	pull	Max. speed no load	full load	Stroke (S)	Retr. length (L)	Voltage	Protection class	Weight
	N	N	mm/s	mm/s	mm	mm	VAC	IP	kg
SLS 18006	18 000	18 000	88	74	100-700	S+446	3x400	54	40
SLS 34013	34 000	34 000	43	36	100-700	S+446	3x400	54	40
SLS 50020	50 000	50 000	27	23	100-700	S+446	3x400	54	40
SLS 50028	50 000	50 000	19	16	100-700	S+446	3x400	54	40
SLS 50050	50 000	50 000	10	9	100-700	S+446	3x400	54	40

S L S | | | | |

Type

Load:
18 000 N — 180
34 000 N — 340
50 000 N — 500

Gear at no load:
88 mm/s, only for load version 18 — 06
43 mm/s, only for load version 340 — 13
27 mm/s, only for load version 500 — 20
19 mm/s, only for load version 500 — 28
10 mm/s, only for load version 500 — 50

Stroke (S):
100 mm — 100
200 mm — 200
300 mm — 300
400 mm — 400
500 mm — 500
600 mm — 600
700 mm — 700

Customer options:
Standard — 01
Others (extended motor shaft, ..) — *XX*

Notes

ECOMAG

The ECOMAG is a compact and cost effective actuator which is designed for medical and home environments. It allows precise movements and ergonomically correct positioning. The safety and reliability of the ECOMAG is well proven.



Benefits

- Compact
- Cost effective
- Control unit can be mounted to the actuator

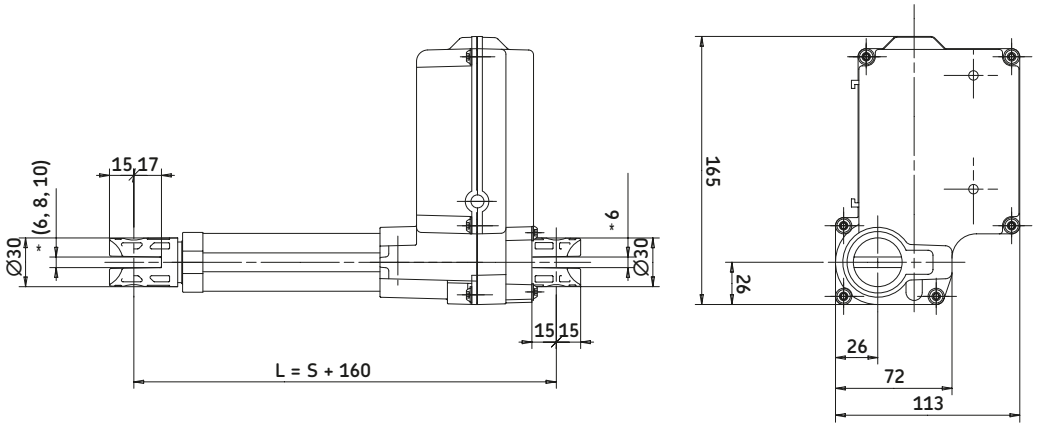

Legend:
S = stroke
L = retracted length

Type	Force push	pull	Max. speed no load	full load	Stroke (S)	Retr. length (L)	Voltage	Protection class	Weight
	N	N	mm/s	mm/s	mm	mm	VDC	IP	kg
ECO 20/40	2 000	0	13	9	50-300	S +160	24	X4S	2,1
ECO 60/80	6 000	0	7	4	50-300	S +160	24	X4S	2,1
ECO 30/50	2 000	2 000	13	9	50-300	S +160	24	X4S	2,5
ECO 70/90	6 000	4 000	7	4	50-300	S +160	24	X4S	2,5

ECOMAG



Type

Load /Housing:

Push	Pull	Housing	
2 000 N	0	Large	2
2 000 N	2 000 N	Large	3
2 000 N	0	Small	4
2 000 N	2 000 N	Small	5
6 000 N	0	Large	6
6 000 N	4 000 N	Large	7
6 000 N	0	Small	8
6 000 N	4 000 N	Small	9

Encoder:

No encoder, coiled cable, 2-pin Minifit plug or customization	*0*
Encoder, 3 pulses, coiled cable, DIN8 plug or customization	*1*
No encoder, coiled cable, jack plug 6,3 mm	*2*
Encoder, 3 pulses, coiled cable, jack plug or customization	*3*
Encoder, 8 pulses, coiled cable, DIN8 plug or customization	*5*
Encoder, 8 pulses, coiled cable, jack plug 6,3 mm, L+5 mm, reset switch for zero align completely retracted position	*7*
Encoder, 8 pulses, coiled cable, jack plug 6,3 mm, reset switch for zero align completely extended position	*8*
No encoder, coiled cable , DIN8 plug or customization	9

Current cut-off:

No	0
Yes (not available for ECO4.-/ECO5.-/ECO8.-/ECO9.-)	*1*

Stroke (S):

50 mm	05
100 mm	10
150 mm	15
200 mm	20
250 mm	25
300 mm	30
50 < S < 300 mm, contact SKF	*00*

Fork head (groove depth 17mm):

Hole, Ø=10 mm, groove width 6 mm (Not available for ECO 3 - 5 - 7 - 9)	*A*
Hole, Ø=10 mm, groove width 8 mm	*B*
Hole, Ø=10 mm, groove width 10 mm	*C*
Hole, Ø=12 mm, groove width 6 mm (Not available for ECO 3 - 5 - 7 - 9)	*K*
Hole, Ø=12 mm, groove width 8 mm (Not available for ECO 3 - 5 - 7 - 9)	*L*
Hole, Ø=12 mm, groove width 10 mm	M
Customized	*Z*

Hinge (groove depth 15mm):

Hole, Ø=10 mm, groove width 6 mm (Not available for ECO 3 - 5 - 7 - 9)	*A*
Hole, Ø=10 mm, groove width 8 mm	*B*
Hole, Ø=10 mm, groove width 10 mm	*C*
Hole, Ø=12 mm, groove width 6 mm (Not available for ECO 3 - 5 - 7 - 9)	*K*
Hole, Ø=12 mm, groove width 8 mm (Not available for ECO 3 - 5 - 7 - 9)	*L*
Hole, Ø=12 mm, groove width 10 mm	M
Customized	*Z*

Hinge position:

0°	1
22,5°	*2*
45°	*3*
77,5°	*4*
90°	*5*
112,5°	*6*
135°	*7*
157,5°	*8*

Colour:

Black	A
Grey RAL 7035	B

Options:

No options	0
Back-up nut (available only for drives with 6 kN, mandatory for UL 2601) - only for ECO 7/9, L = +23 mm	A
FOR ECO3,-/ECO5.-ONLY (no back up nut)	
Quick-release, push force, fork head bore parallel to lever, L = +40 mm, integrated anti-pinching protection.	B
Quick-release, push force, bore 90° to lever, L = +40 mm, integrated anti-pinching protection.	C
Quick-release, pull force, fork head bore parallel to lever, L = +40 mm, integrated anti-pinching protection.	F
Quick-release, pull force, fork head bore 90° to lever, L = +40 mm, integrated anti-pinching protection.	G
Mechanical anti-pinching protection pull, motor direction push, L = +13 mm.	K
Mechanical anti-pinching protection push, motor direction pull, L = +13 mm.	L

Options written in italic fonts are not available as standard. Please contact SKF for verification.

ILD

ILD stands for “Intelligent Linear Drive” and features electronic microprocessor technology for flexible, powerful and durable automation. The concept of the compact ILD actuator consists of a linear drive with an electrically communicated and regulated motor to achieve a linear motion. A powerful micro controller allows the control of position, speed and direction of the drive. ILD actuators are especially suitable for industrial applications with heavy loads.



Benefits

- Control system integrated
- Pogrammable by PC
- Speed and position regulated
- Start / stop-ramp
- Programmable intermediate positions
- Adjustable limit switches
- Robust

Type	Force push	pull	Max. speed no load	full load	Stroke (S)	Retr. length (L)	Voltage	Protection class	Weight
	N	N	mm/s	mm/s	mm	mm	VAC	IP	kg
ILD 02	2 000	2 000	200	200	100-700	S+420	230	54	20,0
ILD 05	5 000	5 000	100	100	100-700	S+420	230	54	20,0
ILD 10	10 000	10 000	50	50	100-700	S+420	230	54	20,0
ILD 20	20 000	20 000	25	25	100-700	S+420	230	54	20,0

ILD

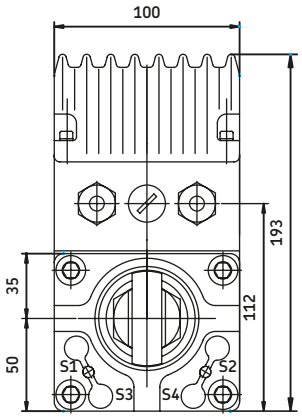

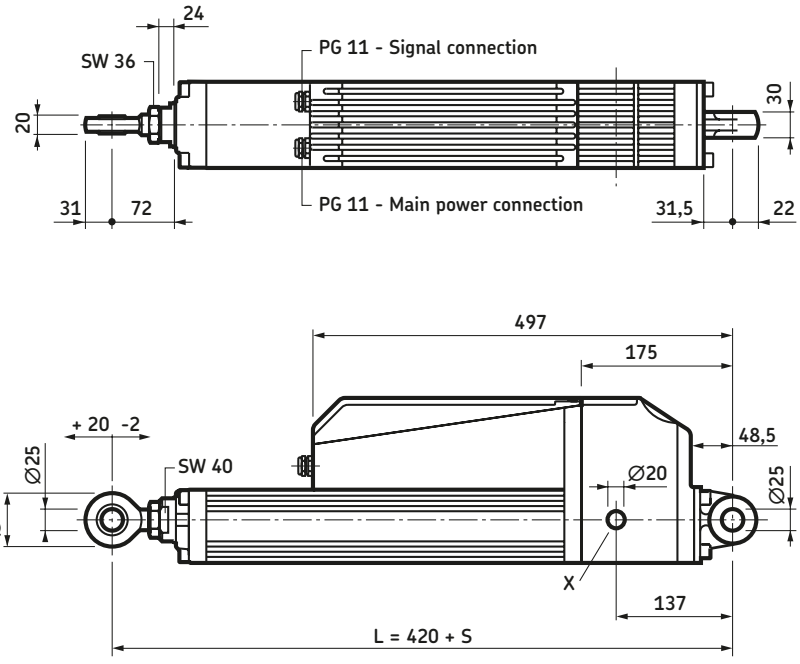

Legend:
S = stroke
L = retracted length

X = Pivot bushing for trunion mount

I	L	D							E		XX		

Type

Load:

2 000 N	02
5 000 N	05
10 000 N	10
20 000 N	20

Positioning options:

Positioning control	P
RPM control	S
CAN open (RS232/CAN Bus)	C

Stroke (S):

200 mm	200
300 mm	300
400 mm	400
500 mm	500
600 mm	600
700 mm	700

Limit switches:

Sensor for limit of travel	E
Sensor for limit of travel and safety switch	S
Sensor for limit of travel and customer switch	A
Sensor for limit of travel, safety switch and customer switch	B

Back-up nuts:

No (standard)	X
Yes	S

Mechanical options:

No option (standard)	02
Others (without rear and/or front end attachment hole....)	XX

CALA 36A

CALA 36A is a compact 12/24 VDC actuator, intended for industrial use. The motor and drive spindle are connected in-line through a planetary gear assembly. This makes the compact design suitable for applications where space is restricted.
A comprehensive range of suitable SKF control systems is available.



Benefits

- 600 N load capacity
- 12 or 24 VDC
- Compact design
- Lubricated for service life
- Corrosion-resistant design
- High operating reliability
- Selection of front attachments
- Limit switches as accessories

Technical data:

Max. dynamic load:	600 N
Static load:	1 000 N
Speed:	23-12 mm/s
Supply voltage:	12 or 24 VDC
Current consumption:	0,5 to 3,0 A (12 VDC) 0,25 to 1,5 A (24 VDC)
Duty factor:	5 % at max. dynamic load
Protection class:	IP44
Standard:	EN 50 081-1, UL
Temperature range:	0 °C to +50 °C
Weight:	0,9 to 1,4 kg

Performance diagram:

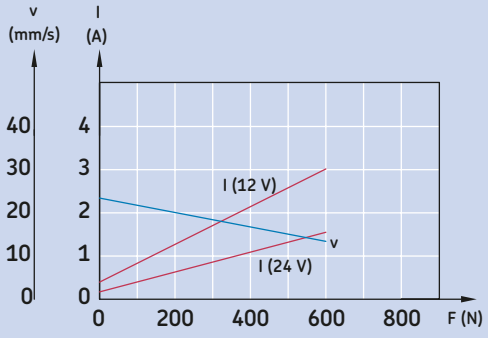

Values given at 20 °C

Type	Force push	pull	Max. speed no load	full load	Stroke (S)	Retr. length* (L)	Voltage	Protection class	Weight
	N	N	mm/s	mm/s	mm	mm	VDC	IP	kg
CALA 36A	600	600	23	12	50 - 200	S+215/226/257	12/24	44	0,9-1,4

*Dimension depends on selected front attachment.

CALA 36A

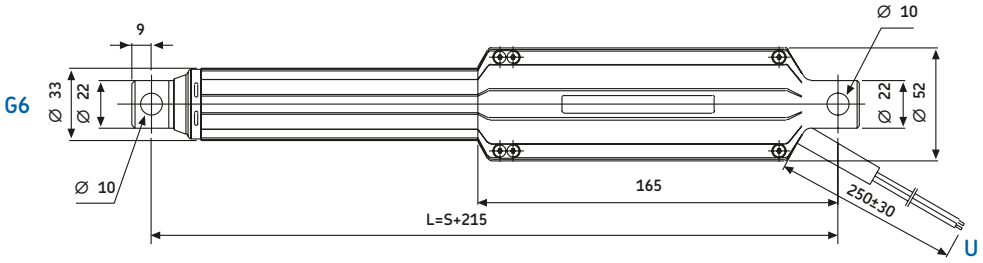

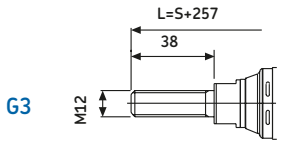

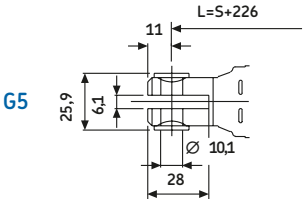

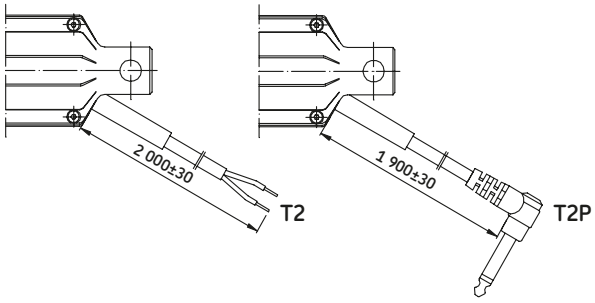

Legend:
S = stroke
L = retracted length

CAXC 33 limit switches

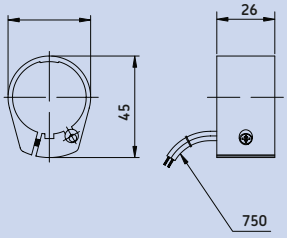

Note! Reduces the effective stroke length by approx. 20 mm. To be ordered separately. More information on page 205.

C	A	L	A	3	6	A	X		X	4		/		

Type

Stroke (S):

50 mm	050
100 mm	100
150 mm	150
200 mm	200
50 mm <S<200 mm	---

Front attachment:

Male thread, M12	G3
Fork end, Ø=10,1 mm	G5
Hole, Ø=10,0 mm	G6

Motor voltage:

12 VDC	D12
24 VDC	D24

Cable:

Straight 0,25 m, no plug	U
Straight 1,9 m, jack plug	T2
Straight 1,9 m, no plug	T2P

Options written in BLUE text are included in the Easy Range concept, which is our special service range for quick delivery from stock.
A type key made with ALL POSITIONS in BLUE qualifies a product for this service.

MATRIX

The MATRIX series includes powerful AC and DC-actuators. They run very quietly, take up little space and can be installed at virtually every angle in vertical or horizontal position. The MATRIX range is complemented by the KOM control units, which allow a flexible and application focused control system.



Benefits

- Long service life
- Silent operation
- Full system with control, operating units and accessories
- Synchronization possible
- Compact and aesthetic
- Safety nut in standard

Accessories

Mains cable	Plug	Country	Order number	Comment
Straight cable 3,5 m	Schuko	DE	140306	
Straight cable 3,5 m	SEV	CH	140316	
Straight cable 3,5 m	UL	USA	140355	
Straight cable 3,5 m	Hospital grade	USA	140360	
Straight cable 3,5 m	British standard	UK	140350	
Coiled cable 1,2 m /2,2 m	Schuko	DE	140342	
Coiled cable 1,2 m /2,2 m	SEV	CH	140378	
Straight cable 3,5 m	SEV	CH	140422-3500	Polyurethane cable
Straight cable 3,5 m	Schuko	DE	140426-3500	Polyurethane cable
Strain relief for mains cable			ZBE-952253	
Tool for plugs (Jack/D-Sub/Mains)			140375	
Operating device adaptor (D-Sub 9-pole)			140420	

Type	Force push	pull	Max. speed no load	full load	Stroke (S)	Retr. length (L)	Voltage	Protection*** class	Weight
	N	N	mm/s	mm/s	mm	mm	V AC/DC	IP	kg
MAX1.-A	4 000	4 000	7	5	50-700	S+195*	24 DC	66S	4,0
MAX1.-B	2 000	2 000	9	6	50-700	S+195*	24 DC	66S	3,7
MAX1.-C	1 500	1 500	18	13	50-700	S+195*	24 DC	66S	3,6
MAX3.-A	8 000	6 000	7	5	50-700	S+215**	24/12 DC	66S	4,5
MAX3.-B	4 000	4 000	9	6	50-700	S+215**	24/12 DC	66S	4,2
MAX3.-C	3 000	3 000	18	13	50-700	S+215**	24/12 DC	66S	4,0
MAX6.-A	8 000	6 000	8	6	50-700	S+215**	120/230 AC	66S	4,8
MAX6.-B	4 000	4 000	10	8	50-700	S+215**	120/230 AC	66S	4,5
MAX6.-C	3 000	3 000	18	15	50-700	S+215**	120/230 AC	66S	4,2

*If stroke >350 mm: L=S+260 mm
**If stroke >350 mm: L=S+280 mm
***Protection class is valid for static conditions. For outdoor applications please contact SKF

MAX1

Legend:
S = stroke
L = retracted length

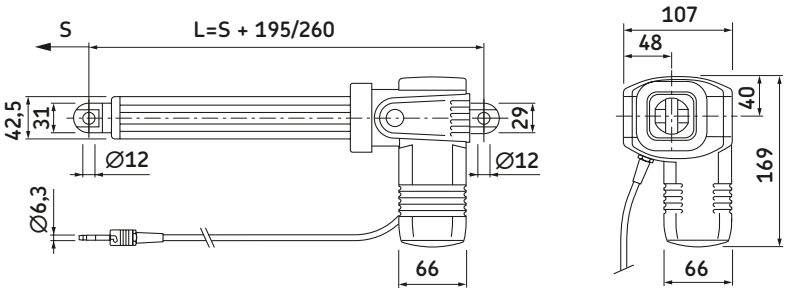

MAX1 ☐ - ☐ ☐☐ ☐☐ A ☐☐ ☐ ☐ ☐ ☐ ☐ - 000

Type

Motor voltage:

24 VDC	0
24 VDC with integrated current cut-off	1

Load:

4 000 N	A
2 000 N	B
1 500 N	C

Stroke (S):

50 mm	050 245
100 mm	100 295
150 mm	150 345
200 mm	200 395
250 mm	250 445
300 mm	300 495
350 mm	350 545
400 mm	400 660
450 mm	450 710
500 mm	500 760
550 mm	550 810
600 mm	600 860
650 mm	650 910
700 mm	700 960
50 <S <700	--- ---

Colour:

Grey RAL 7035	A

Cable/Connecting plug:

Straight, 1,2 m, jack plug	*12*
Straight, 2,5 m, jack plug	*25*
Coiled, 0,75 m (not stretched), jack plug	*0A*
Straight, 0,5 m-2,5 m (select in 0,1 m steps), jack plug	*XX*
Coiled, 0,75 m (not stretched), DIN8 plug	*0B*
Straight, 2,5 m, DIN8 plug	C5
*Straight, 0,5 m-2,5 m (select in 0,1 m steps), DIN8 plug**	- -

**First code: A for cables <1m /B for cables >=1 m, <2 m /C for cables >2 m*
Second code: dm in adition to first code, E.g. B7 =1,7 m (1 m +7 dm)

Orientation of rear attachment:

No fork head (customized option)	0
Standard (as drawing)	1
Turned 90°	2

Options 1:

No options, only valid for actuator "A"	0
Quick-release +EKZm*, push, fork head bore parallel to button (for actuator design "C" is L= +115 mm)	E
Quick-release +EKZm, push, fork head bore 90° to button (for actuator design "C" is L= +115 mm)*	*F*
Quick-release +EKZm*, push, fork head bore parallel to Bowden cable (for actuator design "C" is L= +115 mm)	G
Quick-release +EKZm, push, fork head bore 90° to Bowden cable (for actuator design "C" is L= +115 mm)*	*H*
Mechanical anti-pinching protection, pull, no fixing in term. position (for actuator design "A" is L= +45 mm,"B"and "C" is L= +30 mm)	I
Mechanical anti-pinching protection, push, no fixing in term. position (for actuator design "A" is L= +45 mm,"B"and "C" is L= +30 mm)	J
Push force, for actuator version "B" and "C"	M
Pull force, for actuator version "B" and "C"	N

*EKZm: mechanical anti-pinching

Options 2:

No options	0
Single encoder, 8 pulses (not possible with electrical anti-pinching protection), jack plug	A
Dual encoder, DIN8 plug	F
Lifetime monitoring,	*M*
Lifetime monitoring, Single encoder, 8 pulses, jack plug	*N*
Lifetime monitoring, Dual encoder, DIN8 plug	*O*

Options 3:

Emergency lowering, fork head bore parallel to clamping lever (for actuator design "A", L+30 mm)	V
Emergency lowering, fork head bore 90° to clamping lever (for actuator design "A", L+30 mm)	*W*

Options written in BLUE text are included in the Easy Range concept, which is our special service range for quick delivery from stock.
A type key made with ALL POSITIONS in BLUE qualifies a product for this service.

Options written in italic fonts are not available as standard. Please contact SKF for verification.

MAX3

Legend:
S = stroke
L = retracted length

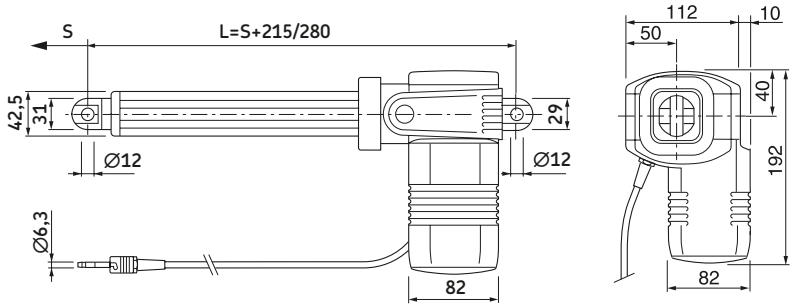

MAX3 [ ] - [ ] [ ] [ ] A [ ] [ ] [ ] [ ] [ ] - 000

Type

Motor voltage:

24 VDC	0
24 VDC, with integrated current cut-off	*1*
12 VDC	2

Load:

8 000 N	A
4 000 N	B
3 000 N	C

Stroke (S):

50 mm	050 265
100 mm	100 315
150 mm	150 365
200 mm	200 415
250 mm	250 465
300 mm	300 515
350 mm	350 565
400 mm	400 680
450 mm	450 730
500 mm	500 780
550 mm	550 830
600 mm	600 880
650 mm	650 930
700 mm	700 980
50 <S <700	--- ---

Colour:

Grey RAL 7035	A

Cable/Connecting plug:

Straight, 1,2 m, jack plug	*12*
Straight, 2,5 m, jack plug	*25*
Coiled, 0,75 m (not stretched), jack plug	*0A*
Straight, 0,5 m-2,5 m (select in 0.1 m steps), jack plug	*XX*
Coiled, 0,75 m (not stretched), DIN8 plug	*0B*
Straight, 2,5 m, DIN8 plug	C5
*Straight, 0,5 m-2,5 m (select in 0.1 m steps), DIN8 plug**	--

**First code: A for cables <1m /B for cables >=1 m,< 2m*
Second code: dm in addition to first code E.g.B7 =1,7 m

Orientation of rear attachment:

No fork head (customized option)	0
Standard (as drawing)	1
Turned 90°	2

Options 1:

No options, only valid for actuator "A"	0
Quick-release +EKZm*, push, fork head bore parallel to button (for actuator design "C" is L= +115 mm)	E
Quick-release +EKZm, push, fork head bore 90° to button (for actuator design "C" is L= +115 mm)*	*F*
Quick-release +EKZm*, push, fork head bore parallel to Bowden cable (for actuator design "C" is L= +115 mm)	G
Quick-release +EKZm, push, fork head bore 90° to Bowden cable (for actuator design "C" is L= +115 mm)*	*H*
Mechanical anti-pinching protection, pull, no fixing in term. position (for actuator design "A" is L= +45 mm,"B"and "C" is L= +30 mm)	I
Mechanical anti-pinching protection, push, no fixing in term. position (for actuator design "A" is L= +45 mm,"B"and "C" is L= +30 mm)	J
Electrical anti-pinching protection (safety switch), pull	K
Electrical anti-pinching protection (safety switch), push	L
Push force, for actuator version "B" and "C""	M
Pull force, for actuator version "B" and "C""	N

*EKZm: mechanical anti-pinching

Options 2:

No options	0
Single encoder, 8 pulses (not possible with electrical anti-pinching protection), jack plug	A
Dual encoder, DIN8 plug	F
Lifetime monitoring,	*M*
Lifetime monitoring, Single encoder, 8 pulses, jack plug	*N*
Lifetime monitoring, Dual encoder, DIN8 plug	*0*

Options 3:

Emergency lowering, fork head bore parallel to clamping lever (for actuator design "A", L+30 mm)	V
Emergency lowering, fork head bore 90° to clamping lever (for actuator design "A", L+30 mm)	*W*

Options written in BLUE text are included in the Easy Range concept, which is our special service range for quick delivery from stock.
A type key made with ALL POSITIONS in BLUE qualifies a product for this service.
Options written in italic fonts are not available as standard. Please contact SKF for verification.

MAX6

Legend:
S = stroke
L = retracted length

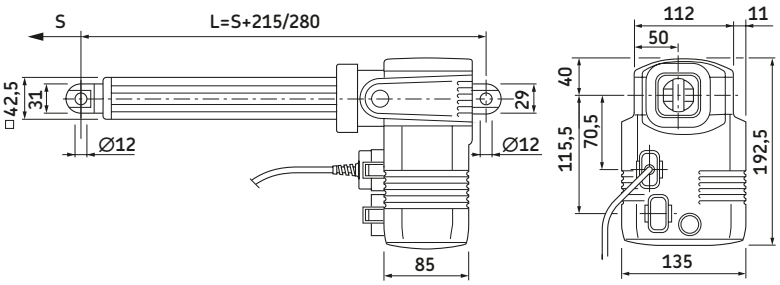

MAX6 □ - □ □ □ A □ □ □ 0 □ - 000

Type

Motor voltage:

230 VAC/50 Hz, integrated pneumatic control	0
120 VAC/60 Hz, integrated pneumatic control	1
230 VAC/50 Hz, integrated low voltage control with additional 24 V output	2
120 VAC/60 Hz, control +1 channel with additional 24 V output	3
230 VAC/50 Hz, integrated low voltage	4
120 VAC/60 Hz, control	5

Load:

8 000 N	A
4 000 N	B
3 000 N	C

Stroke (S):

50 mm	050 265
100 mm	100 315
150 mm	150 365
200 mm	200 415
250 mm	250 465
300 mm	300 515
350 mm	350 565
400 mm	400 680
450 mm	450 730
500 mm	500 780
550 mm	550 830
600 mm	600 880
650 mm	650 930
700 mm	700 980
50 <S<700	--- ---

Colour:

Grey RAL 7035	A

Cable/Connecting plug:

No cable	0
Straight, 2,5 m, no plug (4-wire) - only for MAX67 and MAX 68	*H*

Orientation of rear attachment:

No fork head (customized option)	*0*
Standard (as drawing)	1
Turned 90°	*2*

Options 1:

No options, only valid for actuator "A"	0
Quick-release +EKZm*, push, fork head bore parallel to button (for actuator design "C" is L= +115 mm)	E
Quick-release +EKZm*, push, fork head bore 90° to button (for actuator design "C" is L= +115 mm)	F
Quick-release +EKZm*, push, fork head bore parallel to Bowden cable (for actuator design "C" is L= +115 mm)	G
Quick-release +EKZm*, push, fork head bore 90° to Bowden cable (for actuator design "C" is L= +115 mm)	H
Mechanical anti-pinching protection, pull, no fixing in term. position (for actuator design "A" is L= +45 mm,"B"and "C" is L= +30 mm)	I
Mechanical anti-pinching protection, push, no fixing in term. position (for actuator design "A" is L= +45 mm,"B"and "C" is L= +30 mm)	J
Electrical anti-pinching protection (safety switch), pull	K
Electrical anti-pinching protection (safety switch), push	L
Push force, for actuator version "B" and "C"	M
Pull force, for actuator version "B" and "C"	N

*EKZm: mechanical anti-pinching

Options 2:

No option	0
Lifetime monitoring	*M*

Options 3:

Emergency lowering, fork head bore parallel to clamping lever (for actuator design "A", L+30 mm)	V
Emergency lowering, fork head bore 90 ° to clamping lever (for actuator design "A", L+30 mm)	*W*

Options written in BLUE text are included in the Easy Range concept, which is our special service range for quick delivery from stock.
A type key made with ALL POSITIONS in BLUE qualifies a product for this service.
Options written in italic fonts are not available as standard. Please contact SKF for verification.

Notes

Notes

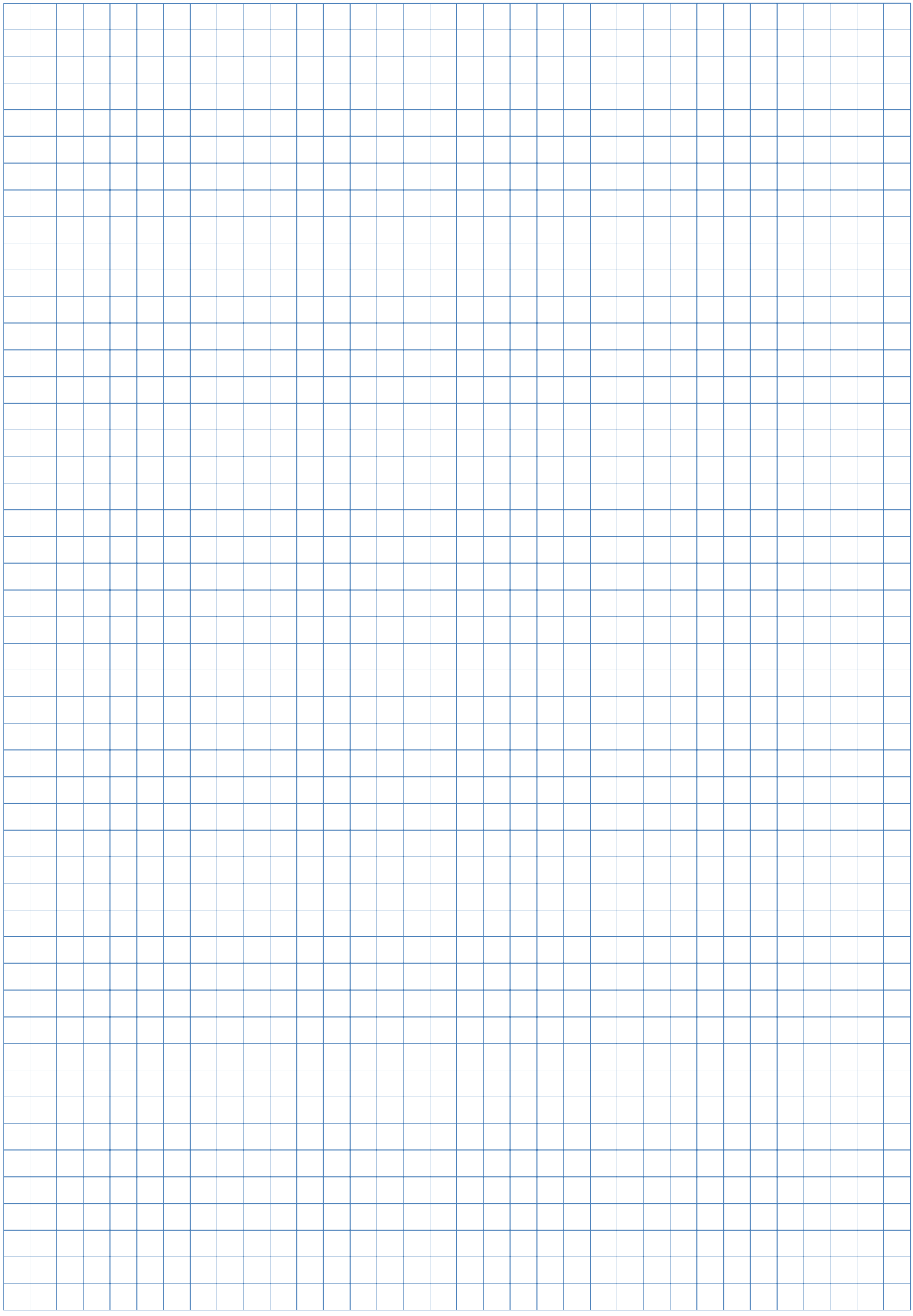

CARE 33

The CARE 33 actuator system has primarily been designed and developed for health care and ergonomic applications. Efficient design allows the CARE 33 actuators a high dynamic load capacity, silent operation and low current consumption. The safety features of the design make it particularly suitable for solving a large number of positioning needs in equipment for the elderly and disabled, as well as for many ergonomic and/or industrial applications. The gearbox is allowed to float so that the load path passes directly through a support bearing located in the rear attachment. This design offers long operational life and minimizes the transmitted noise level. Design options are available to optimize safety in applications. The CARE 33 actuator system offers a wide range of extra features such as power saving, overload protection, transformer cut-off, infrared remote control and CAXC limit switches. Since the motor is capable of generating greater torque than required to produce the rated thrust, our selected control units are configured to ensure proper function.

Benefits

- Silent operation
- Multiple speed/load variants
- Easy to adjust limit switches
- Different attachment options



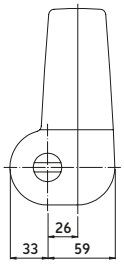

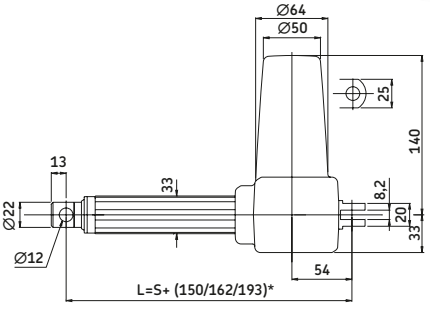



Rear attachment orientation view.

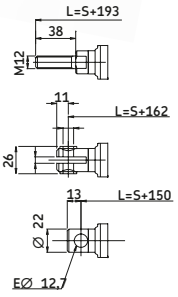

Legend:
S = stroke
L = retracted length

*Dimension depends on selected front attachment.

Technical data:	CARE 33A	CARE 33M	CARE 33H
Max. dynamic load:	2 000 N	1 400 N	800 N
Max. static load:	6 000 N	3 000 N	3 000 N
Stroke length:	50-300 mm	50-500 mm	50-500 mm
Speed:	8-12 mm/s	16-22 mm/s	32-45 mm/s
Mains supply voltage:	12 VDC or 24 VDC	12 VDC or 24 VDC	12 VDC or 24 VDC
Max. power consumption:	12 VDC/8 A, 24VDC/3,5 A	12 VDC/8 A, 24 VDC/3,5 A	12 VDC/8 A, 24 VDC/3,5 A
Duty factor:	20 % at 2 000 N	20 % at 1 400 N	20 % at 800 N
Cable:	Coiled or straight, 2,0 m	Coiled or straight, 2,0 m	Coiled or straight, 2,0 m
Connection plug:	DIN 8-pole Jack plug	DIN 8-pole Jack plug	DIN 8-pole Jack plug
No connector:	6 lead cable for encoder 2 lead cable	6 lead cable for encoder 2 lead cable	6 lead cable for encoder 2 lead cable
Encoder:	Hall-effect element	Hall-effect element	Hall-effect element
Protection class:	IP44 or IP65	IP44 or IP65	IP44 or IP65
Housing material:	Polyamide PA-6	Polyamide PA-6	Polyamide PA-6
Manufactured acc. to:	EN 55 014, EN 55 011	EN 55 014, EN 55 011	EN 55 014, EN 55 011

Type	Force push	pull	Max. speed no load	full load	Stroke (S)	Retr. length* (L)	Voltage	Protection class	Weight
	N	N	mm/s	mm/s	mm	mm	VDC	IP	kg
CARE 33H	800	800	45	32	50-500	S+150/162/193	12/24	44/65	1,5-2,4
CARE 33M	1 400	1 400	22	16	50-500	S+150/162/193	12/24	44/65	1,5-2,4
CARE 33A	2 000	2 000	12	8	50-300	S+150/162/193	12/24	44/65	1,5-2,0

*Dimension depends on selected front attachment

CARE 33

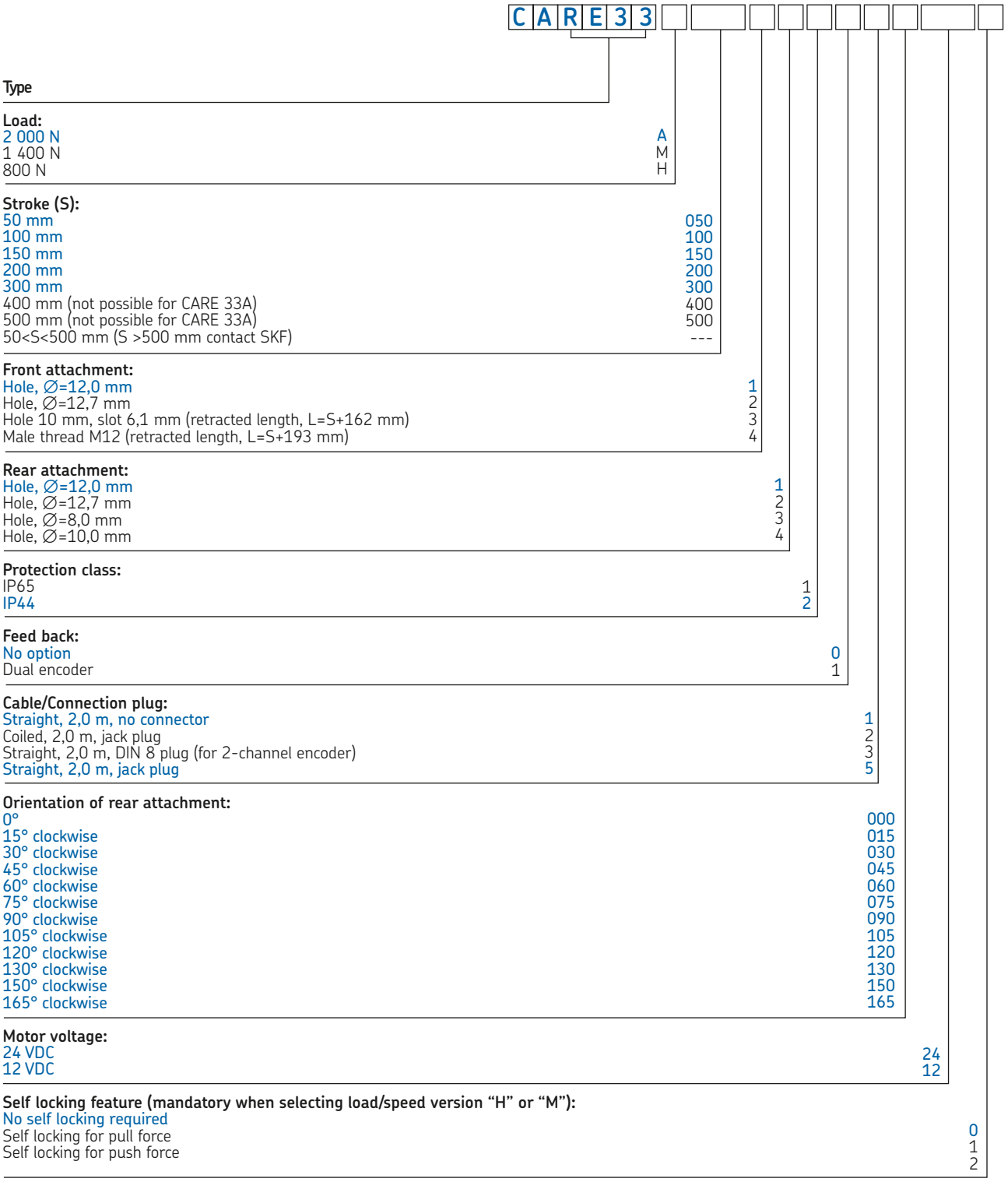

Options written in BLUE text are included in the Easy Range concept, which is our special service range for quick delivery from stock.
A type key made with ALL POSITIONS in BLUE qualifies a product for this service.

RUNNER

The RUNNER is a very compact, high performance actuator combining maximum load and maximum speed. The system includes a single fault safe control unit for up to 3 actuators as well as corresponding accessories. The RUNNER system is compatible with the TELEMAG DC series.



Benefits

- High push/pull force
- Compact design
- Silent operation
- Long service life
- Safety nut in standard
- High security factor in static

RU20/RU21/RU22

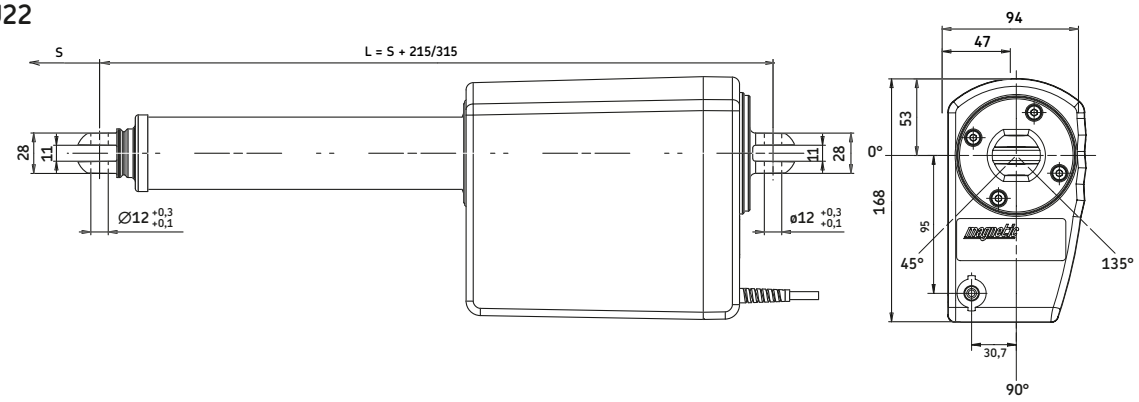

Legend:
S = stroke
L = retracted length

Type	Force push	pull	Max. speed no load	full load	Stroke (S)	Retr. length* (L)	Voltage	Protection** class	Weight
	N	N	mm/s	mm/s	mm	mm	VDC	IP	kg
RU20	8 000	8 000	10	7	100 - 700	S+215/315*	24	X4/X6S	4,7
RU21	10 000	8 000	8	5	100 - 700	S+215/315*	24	X4/X6S	4,7
RU22	12 000	8 000	7	4	100 - 700	S+215/315*	24	X4/X6S	4,7
RU23	8 000	8 000	14	8	100 - 700	S+215/315*	24	X4/X6S	4,7
RU24	10 000	8 000	12	6	100 - 700	S+215/315*	24	X4/X6S	4,7
RU25	12 000	8 000	9	5	100 - 700	S+215/315*	24	X4/X6S	4,7

*If stroke "S" is > 500 mm is retracted length "L" = S+315mm
**Protection class is valid for static conditions. For outdoor applications, please contact SKF

RUNNER

R U 2 □ - □ □ □ □ □ □ □ - 00

Type

Voltage:
24 VDC

Load / Speed:

8 000 N / 7-10 mm/s	0
8 000 N / 8-14 mm/s	3
10 000 N / 5-8 mm/s	1
10 000 N / 6-12 mm/s	4
12 000 N / 4-7 mm/s	2
12 000 N / 5-9 mm/s	5

Stroke (S) / Retracted length (L):

50 mm/315 mm	0 5 0 3 1 5
100 mm/315 mm	1 0 0 3 1 5
150 mm/365 mm	1 5 0 3 6 5
200 mm/415 mm	2 0 0 4 1 5
250 mm/465 mm	2 5 0 4 6 5
300 mm/515 mm	3 0 0 5 1 5
350 mm/565 mm	3 5 0 5 6 5
400 mm/615 mm	4 0 0 6 1 5
450 mm/665 mm	4 5 0 6 6 5
500 mm/715 mm	5 0 0 7 1 5
550 mm/865 mm	5 5 0 8 6 5
600 mm/915 mm	6 0 0 9 1 5
650 mm/965 mm	6 5 0 9 6 5
700 mm/1 015 mm	7 0 0 x x x
50<S<500 mm/S+215	- - - - - -
500<S<700 mm/S+315	- - - - - -
S>700 mm (customized)	*x x x x x x*

Protection class /Colour:

IPx4S, grey RAL 7035	A
IPx6S, grey RAL 7035	B

Cable:

Straight cable, 0,2 m, DIN8 plug (for BCU piggyback)	02
Straight cable, 1,5 m, DIN8 plug	15
Straight cable, 1,5 m, Jack plug 180°	*0D*

Rear attachment orientation /Hole diameter:

0° ∅=12,0 mm	0
45° ∅=12,0 mm	*2*
90° ∅=12,0 mm	*4*
135° ∅=12,0 mm	*6*

Option 1:

No option	0
Electrical anti-pinching (safety switch), pull force, L+20 mm	*K*
Electrical anti-pinching (safety switch), push force, L+20 mm	*L*

Option 2:

No option	0
Dual encoder, 14 pulses, DIN8 plug	A
Lifetime monitoring	M
Dual encoder, 14 pulses, DIN8 plug, lifetime monitoring	N
Fixing bracket - piggy back - for connection BCU control unit on the actuator	*X*

Option 3:

Emergency lowering, L+53 mm	*V*

Options written in italic fonts are not available as standard. Please contact SKF for verification.

MAGPUSH

MAGPUSH linear actuators are extremely quiet and smooth running. They take up little space, are maintenance-free and can be installed vertically or horizontally or at an intermediate angle. MAGPUSH actuators are very robust and work in many applications. They are ideally suited for raising and lowering large loads.



Benefits

- Long stroke by a short assembly dimension
- Long service life
- Silent operation
- Robust

Type	Force push	pull	Max. speed no load	full load	Stroke (S)	Retr. length (L)	Voltage	Protection	Weight
	N	N	mm/s	mm/s	mm	mm	VAC	IP	kg
GC 84 TL	500	300	6	6	200/300/500	54	230	54	2,3 - 2,4
GC 84 UB	400	400	8	8	210	S+170	230	55	3,0
HC 85 UB	1 500	1 500	10	10	260	S+190	230	55	6,0
LC 12,6 UB	3 000	3 000	30	30	310	S+235	230	55	11
LC 6,6 UB	3 000	3 000	15	15	310	S+235	230	55	11

MAGPUSH GC 84 TL

Legend:
S = stroke
L = retracted length

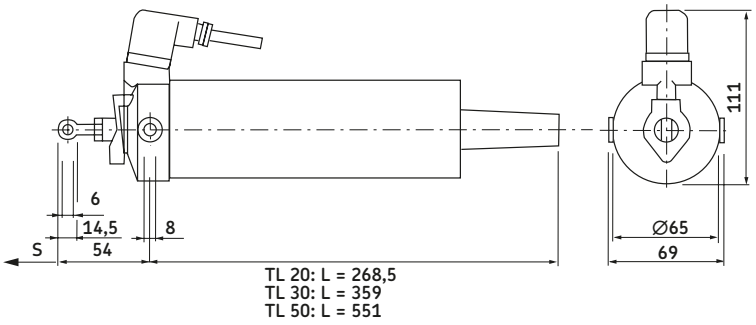

Type	Force push	pull	Max. speed no load	full load	Stroke (S)	Retr. length (L)	Voltage	Protection class	Weight
	N	N	mm/s	mm/s	mm	mm	VAC	IP	kg
GC 84 TL	500	300	6	6	200/300/500	54	230	54	2,3-2,4

G C 8 4 T L - □□ □□

Type

Stroke (S):
200 mm 20
300 mm 30
500 mm 50

Options:
No option 01
With integrated relais 02

Accessories for MAGPUSH GC 84 TL

Accessories	Order N°
Fixing bracket	940303
Pivot screws, alone	940306
Pull adapter	939185
Rear adapter, short	940646
Rear adapter, long	940611

MAGPUSH GC 84 UB

Legend:
S = stroke
L = retracted length

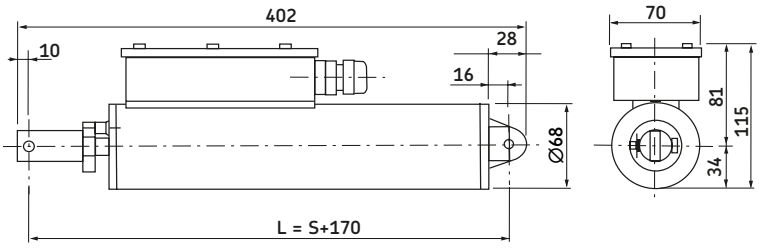

Type	Force push	pull	Max. speed no load	full load	Stroke (S)	Retr. length (L)	Voltage	Protection class	Weight
	N	N	mm/s	mm/s	mm	mm	VAC	IP	kg
GC 84 UB	400	400	8	8	210	380	230	55	3,0

Type code: GC 84 UB - 01

MAGPUSH HC 85 UB

Legend:
S = stroke
L = retracted length

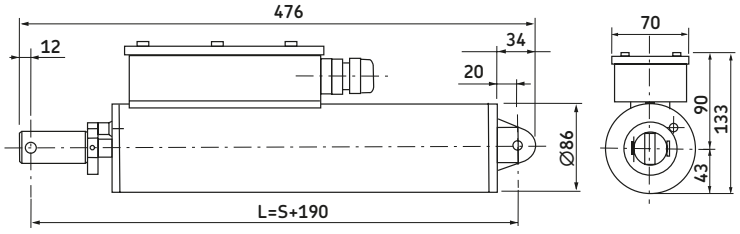

Type	Force push	pull	Max. speed no load	full load	Stroke (S)	Retr. length (L)	Voltage	Protection class	Weight
	N	N	mm/s	mm/s	mm	mm	VAC	IP	kg
HC 85 UB	1 500	1 500	10	10	260	450	230	55	6,0

Type code: HC 85 UB - 01

MAGPUSH LC ...UB

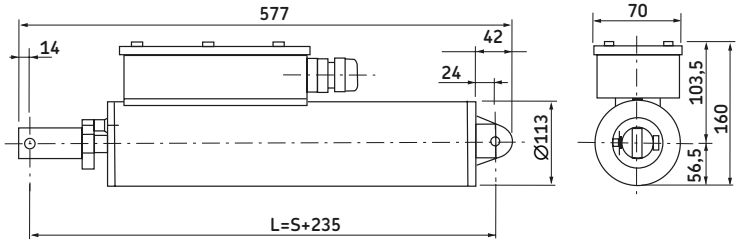

Type	Force push	pull	Max. speed no load	full load	Stroke (S)	Retr. length (L)	Voltage	Protection class	Weight
	N	N	mm/s	mm/s	mm	mm	VAC	IP	kg
LC 12,6 UB	3 000	3 000	15	15	310	545	230	55	11
LC 6,6 UB	3 000	3 000	30	30	310	545	230	55	11

Type codes: LC 12,6 UB -01, LC 6,6 UB - 01

MAGTOP CS

The MAGTOP product family is a compact and cost-effective actuator, primarily designed for the building and construction segment. The MAGTOP is suitable for opening and closing windows, doors, smoke vents, etc., as well as for skylight and dome-light applications. These rod actuators are powerful, economical and capable of withstanding high maximum loads (from 200 to 2 000 N) and provide a wide range of opening and closing strokes (up to 500 mm).



Benefits

- Compact and silent operation
- Cost-effective
- Lubricated for service life
- Easy to install
- Rigid rod movement

Type	Force		Max. speed		Stroke	Retr. length	Voltage	Protection	Weight
	push	pull	no load	full load	(S)	(L)		class	
	N	N	mm/s	mm/s	mm	mm	V AC/DC	IP	kg
CS10	200	200	37	30	105-300	278-393	230 AC	44	1,3
CS20	450	450	22	18	160-300	266-411	230 AC	54	1,7
CS31	500	500	24	19	200-400	309-509	230 AC	55	2,1
CS40	450	450	12	8	200-500	330-630	230 AC/24 DC	55	1,4
CS50	1 000	1 000	24	21	300-500	415-615	230 AC	55	3,4
CS60	600	600	24	22	180-500	345-620	230 AC	44	3,4
CS70	2 000	2 000	19	14	180-500	278-598	230 AC	40	6,5

MAGTOP CS10

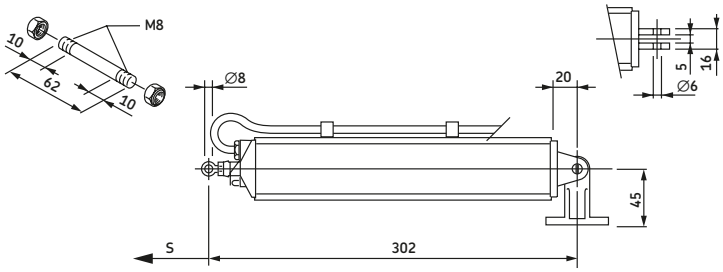

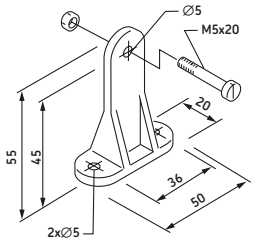

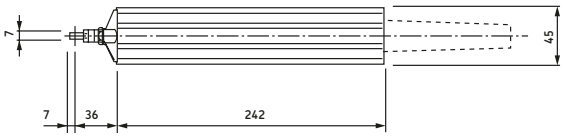

S	A	B	C	D
105	278	-	-	-
165	278	-	-	-
180	278	-	-	-
300	393	115	Ø24	Ø28

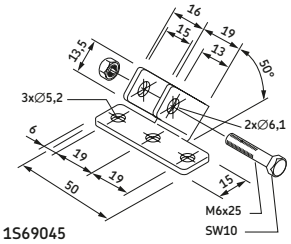

1S69045

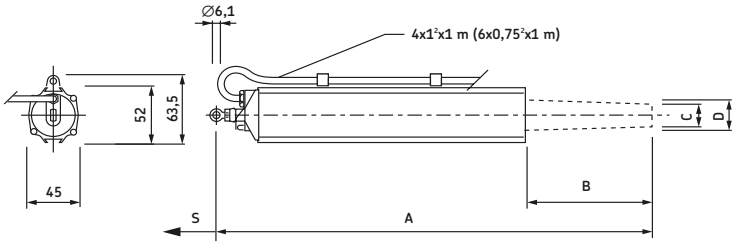

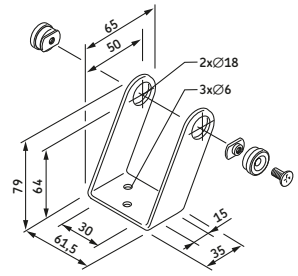

A00579

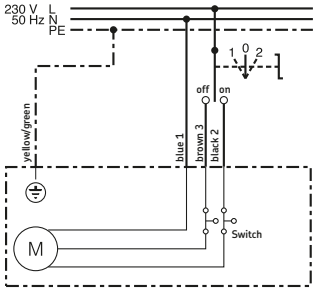

Type	Force push	pull	Max. speed no load	full load	Stroke (S)	Retr. length (L)	Voltage	Protection class	Weight
	N	N	mm/s	mm/s	mm	mm	VAC	IP	kg
CS10	200	200	37	30	105-300	278-393	230	44	1,3

Type
Spindle actuator

CS10-□□□□-230-S-00

Stroke (S):
105 mm 0105
165 mm 0165
180 mm 0180
300 mm 0300

Supply voltage:
230 VAC 230

Color:
Silver EV1 S

Options:
None 00

MAGTOP CS20

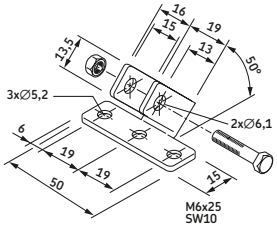

1S69045

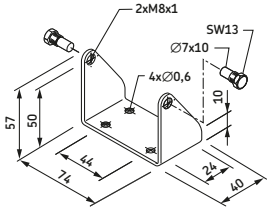

A00635

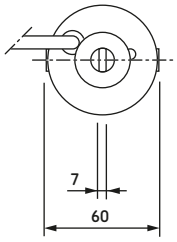

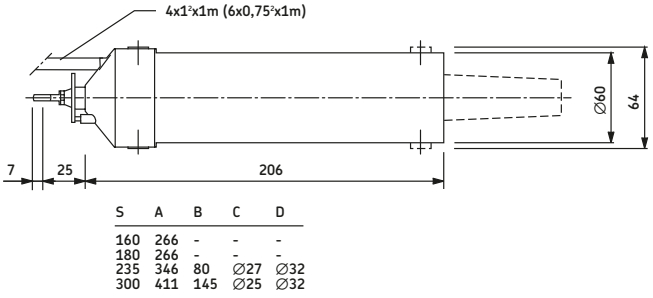

S	A	B	C	D
160	266	-	-	-
180	266	-	-	-
235	346	80	Ø27	Ø32
300	411	145	Ø25	Ø32

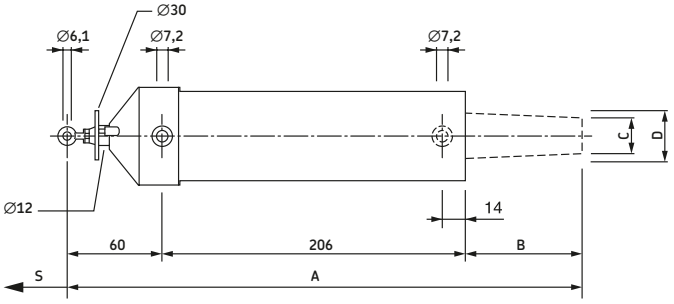

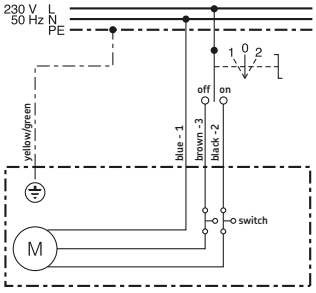

Type	Force push	pull	Max. speed no load	full load	Stroke (S)	Retr. length (L)	Voltage	Protection class	Weight
	N	N	mm/s	mm/s	mm	mm	VAC	IP	kg
CS20	450	450	22	18	160-300	266-411	230	54	1,7

Type
Spindle actuator

CS20-□□□□-230-S-00

Stroke (S):
160 mm — 0160
180 mm — 0180
235 mm — 0235
300 mm — 0300

Supply voltage:
230 VAC — 230

Color:
Silver EV1 — S

Options:
None — 00

MAGTOP CS31

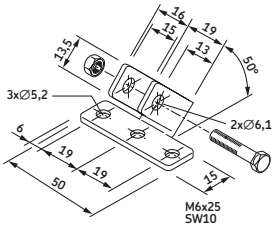

1S69045

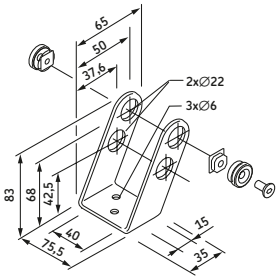

CD97002300

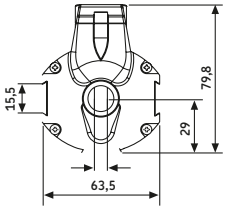

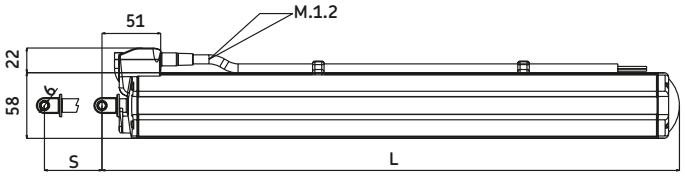

S	L
200	308.8
300	408.8
400	508.8

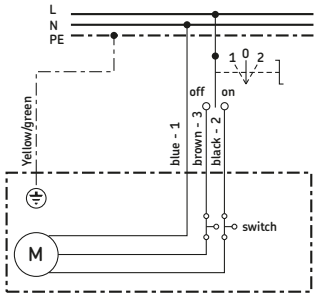

Type	Force push	pull	Max. speed no load	full load	Stroke (S)	Retr. length (L)	Voltage	Protection class	Weight
	N	N	mm/s	mm/s	mm	mm	VAC	IP	kg
CS31	500	500	24	19	200-400	309-509	230	55	2,1

Type
Spindle actuator

C S 3 1 - □ □ □ □ - 2 3 0 - S - 0 0

Stroke (S):
200 mm
300 mm
400 mm
→ 0200 0300 0400

Supply voltage:
230 VAC
→ 230

Color:
Silver EV1
→ S

Options:
None
→ 00

MAGTOP CS40

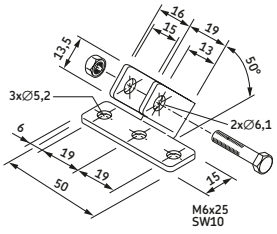

1S69045

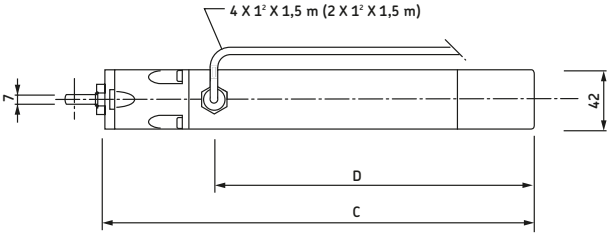

S	A	B	C	D
200	330	200	308	234
300	430	300	408	334
500	630	500	608	534

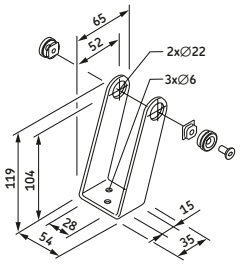

C A091200

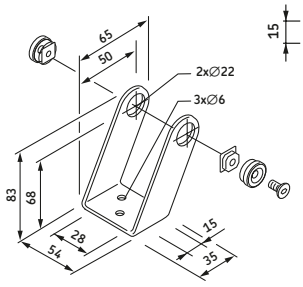

B CD91201

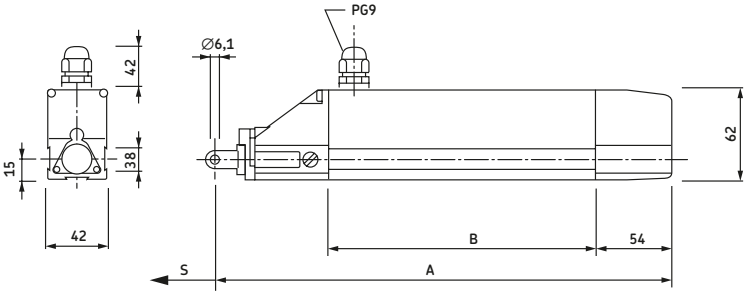

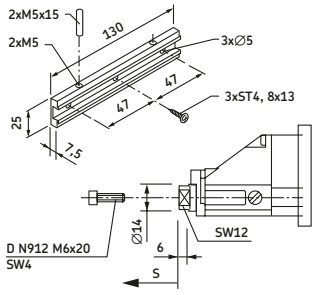

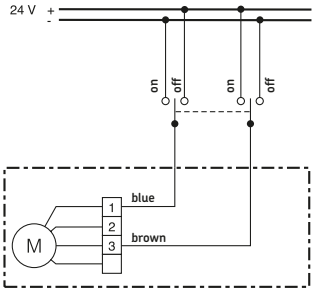

24 VDC

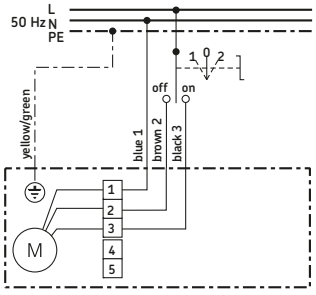

230 VAC

Type	Force push	pull	Max. speed no load	full load	Stroke (S)	Retr. length (L)	Voltage	Protection class	Weight
	N	N	mm/s	mm/s	mm	mm	V AC/DC	IP	kg
CS40	450	450	12	8	200-500	330-630	230/24	55	1,4

Type
Spindle actuator

CS40 - □□□□ - □□□ - S - 00

Stroke (S), adjustable from 1mm to max. length:

200 mm	0200
300 mm	0300
500 mm	0500

Supply voltage:

230 VAC	230
24 VDC	024

Color:

Silver EV1	S

Options:

None	00

MAGTOP CS50

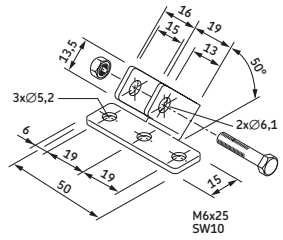

1S569045

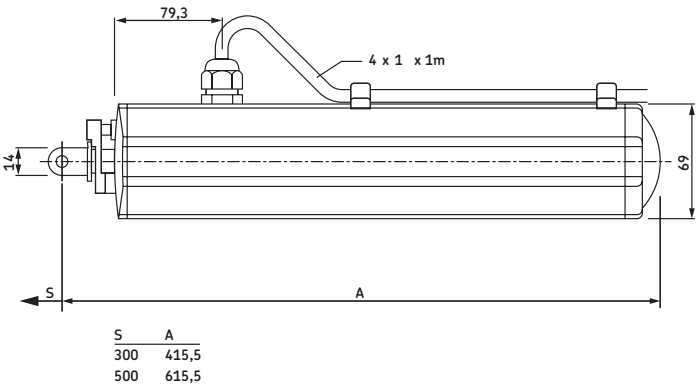

S	A
300	415,5
500	615,5

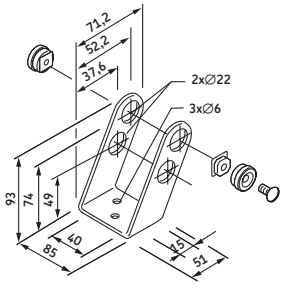

CD20003100

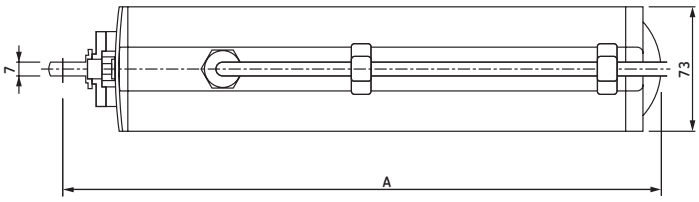

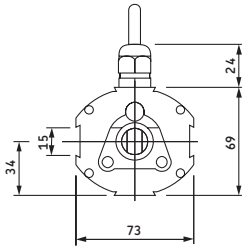

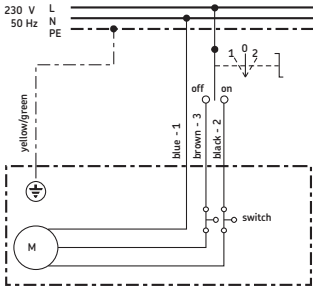

Type	Force push	pull	Max. speed no load	full load	Stroke (S)	Retr. length (L)	Voltage	Protection class	Weight
	N	N	mm/s	mm/s	mm	mm	VAC	IP	kg
CS50	1 000	1 000	24	21	300-500	415-615	230	55	3,4

Type
Spindle actuator

Stroke (S):
300 mm
500 mm

Supply voltage:
230 VAC

Color:
Silver EV1

Options:
None

CS50-□□□□-230-S-00

0300
0500
230
S
00

MAGTOP CS60

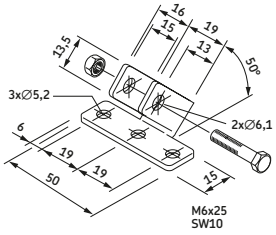

1S69045

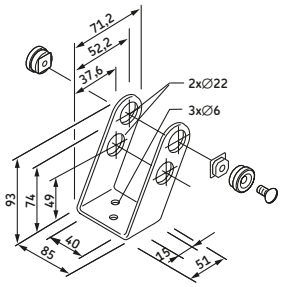

A00835

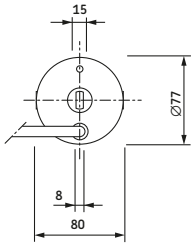

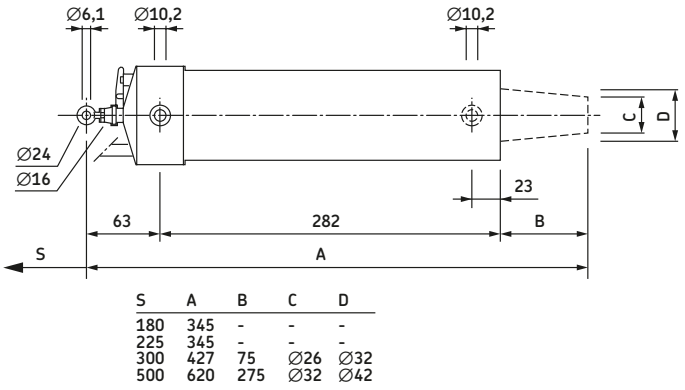

S	A	B	C	D
180	345	-	-	-
225	345	-	-	-
300	427	75	Ø26	Ø32
500	620	275	Ø32	Ø42

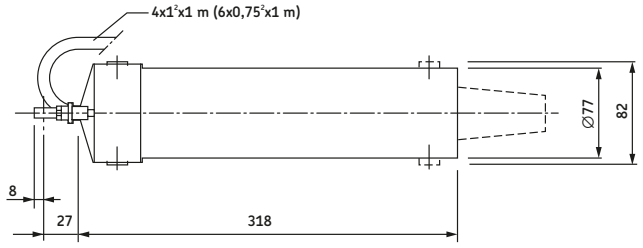

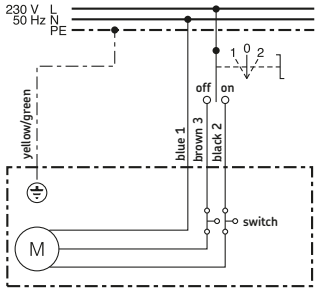

Type	Force push	pull	Max. speed no load	full load	Stroke (S)	Retr. length (L)	Voltage	Protection class	Weight
	N	N	mm/s	mm/s	mm	mm	VAC	IP	kg
CS60	600	600	24	22	180-500	345-620	230	44	3,4

Type
Spindle actuator

CS60-□□□□-230-S-00

Stroke (S):
180 mm 0180
225 mm 0225
300 mm 0300
500 mm 0500

Supply voltage:
230 VAC 230

Color:
Silver EV1 S

Options:
None 00

MAGTOP CS70

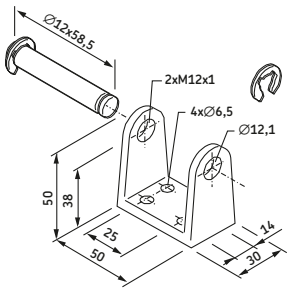

CD 0130

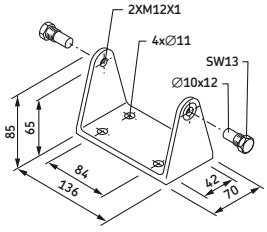

A 00129

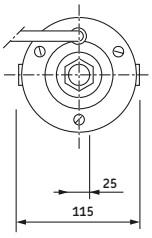

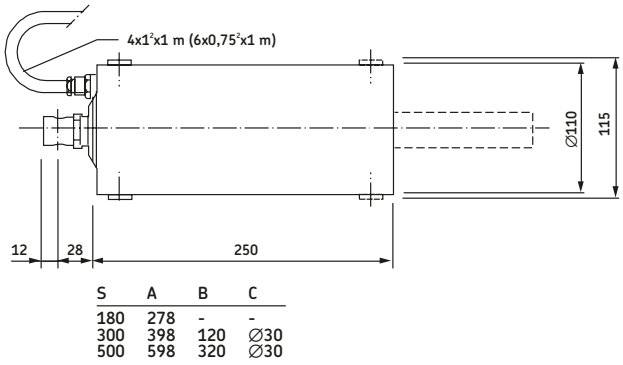

S	A	B	C
180	278	-	-
300	398	120	Ø30
500	598	320	Ø30

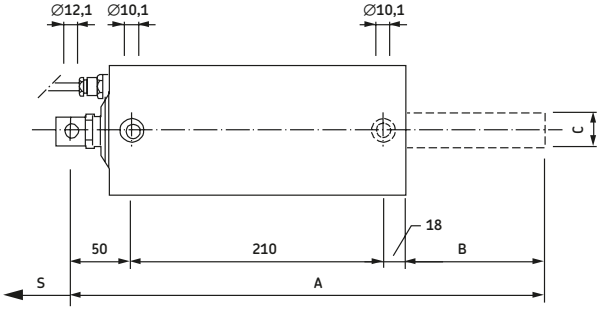

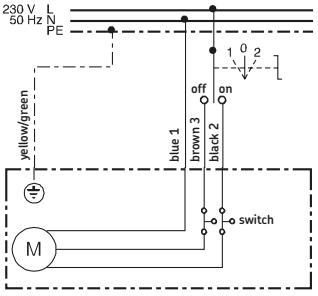

Type	Force push	pull	Max. speed no load	full load	Stroke (S)	Retr. length (L)	Voltage	Protection class	Weight
	N	N	mm/s	mm/s	mm	mm	VAC	IP	kg
CS70	2 000	2 000	19	14	180-500	278-598	230	40	6,5

Type
Spindle actuator

CS70 - □□□□ - 230 - S - 00

Stroke (S):
180 mm — 0180
300 mm — 0300
500 mm — 0500

Supply voltage:
230 VAC — 230

Color:
Silver EV1 — S

Options:
None — 00

VARIMAG CC

The VARIMAG product family is a compact and cost-effective actuator, primarily designed for the building and construction segment. VARIMAG chain actuators are the ideal solution for automatically controlled windows. They take up very little space and the comprehensive range provides the correct strokes, thrust forces and chain resistance required for most window applications.



Benefits

- Compact and silent
- Cost-effective
- Take up minimum space
- Easy to install

Type	Force push	pull	Max. speed no load	full load	Stroke (S)	Retr. length (L)	Voltage	Protection class	Weight
	N	N	mm/s	mm/s	mm	mm	V AC/DC	IP	kg
CC10	150	300	45	38	250-380	N/A	230/24	20	1,6-1,8
CC20	200	200	17	10	200-250	N/A	230/24	20	1,0
CC30	250	250	32/28	28/26	400	N/A	230/24	22	1,0
CC40	350	350	19	15	280-380	N/A	230/24	22	1,8
CC50	400	400	28/38	18/22	420-600	N/A	230/24	22	3,5-4,0

VARIMAG CC10

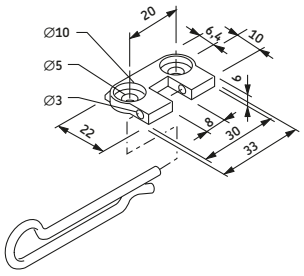

D00740

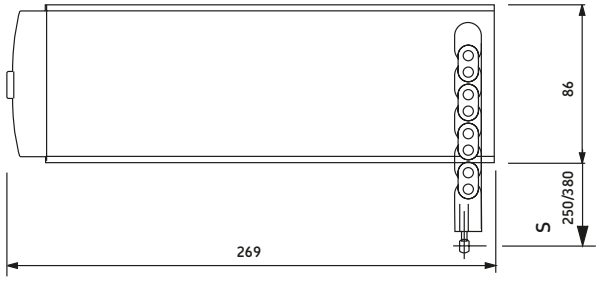

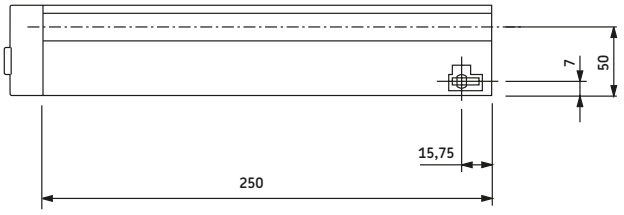

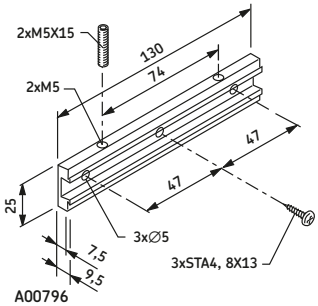

A00796

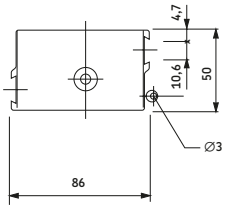

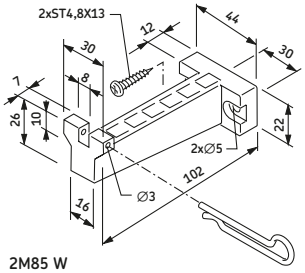

2M85 W

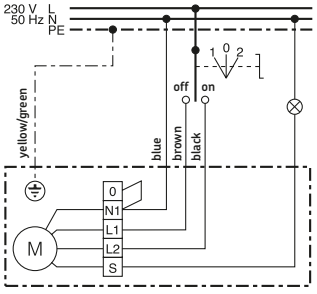

230 VAC

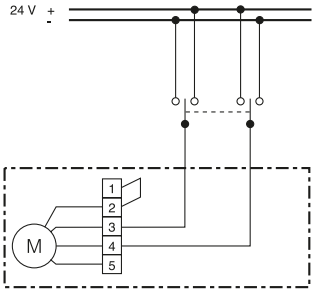

24 VDC

Type	Force push	pull	Max. speed no load	full load	Stroke (S)	Retr. length (L)	Voltage	Protection class	Weight
	N	N	mm/s	mm/s	mm	mm	V AC/DC	IP	kg
CC10	150	300	45	38	250-380	N/A	230/24	20	1,6-1,8

Type
Chain actuator

CC10-0380-[ ][ ][ ]-[ ]-00

Supply voltage:
230 VAC — 230
24 VDC — 024

Color:
Silver EV1 — S
White RAL 9016 — W

Options:
None — 00

VARIMAG CC20

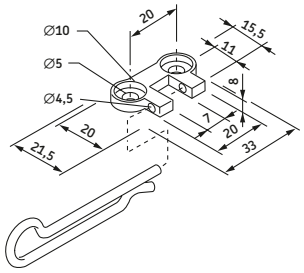

2096000100

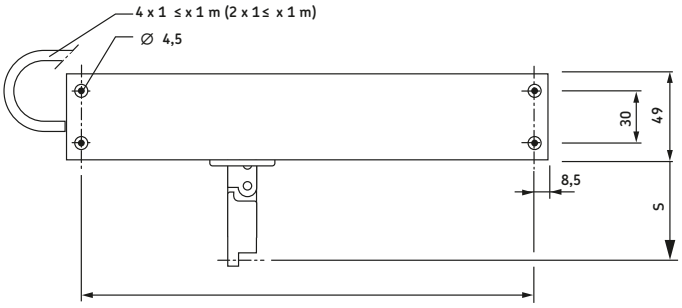

Versions	S	A	B	C
24 V DC	200	245	262	96
24 V DC	250	270	287	96
230 V AC	200	325	342	176
230 V AC	250	350	367	176

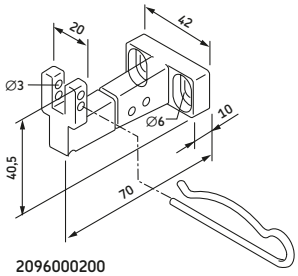

2096000200

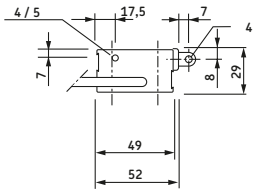

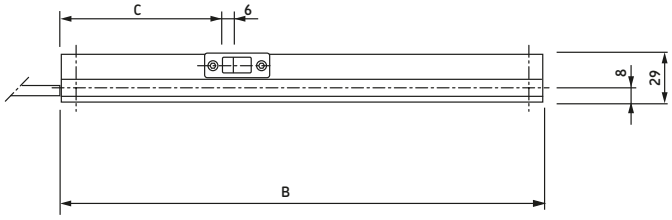

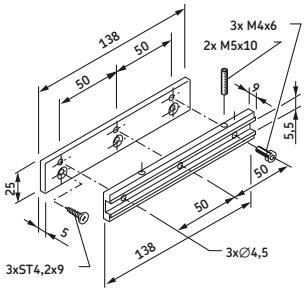

2096000100/2096000200

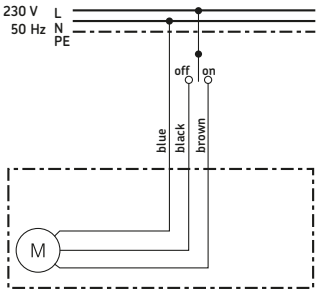

230 VAC

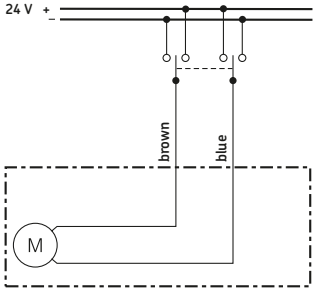

24 VDC

Type	Force push	pull	Max. speed no load	full load	Stroke (S)	Retr. length (L)	Voltage	Protection class	Weight
	N	N	mm/s	mm/s	mm	mm	V AC/DC	IP	kg
CC20	200	200	17	10	200-250	N/A	230/24	20	1,0

Type
Chain actuator

Stroke (S):
200 mm
250 mm

Supply voltage:
230 VAC
24 VDC

Color:
Silver EV1
White RAL 9016

Options:
None

CC20 - [0200 / 0250] - [230 / 024] - [S / W] - 00

VARIMAG CC30

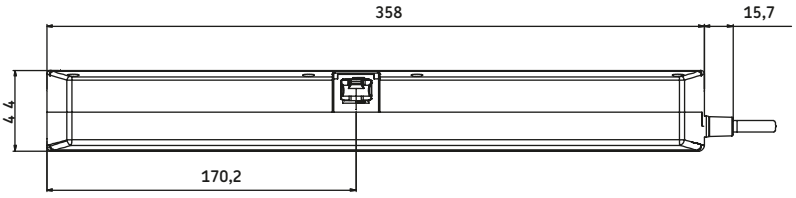

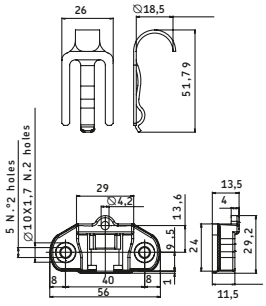

A020300400

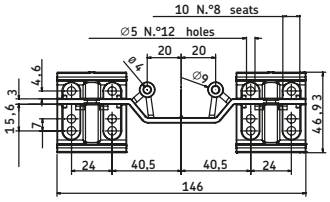

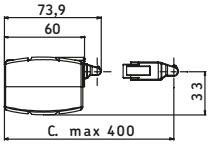

A020300400 / 2020300100

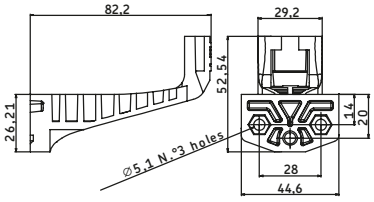

2020300100

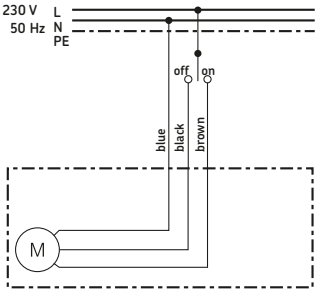

230 VAC

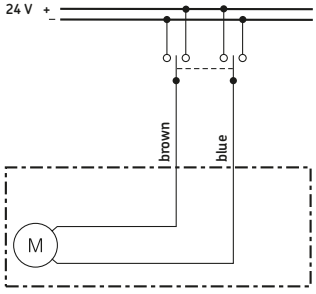

24 VDC

Type	Force push	pull	Max. speed no load	full load	Stroke (S)	Retr. length (L)	Voltage	Protection class	Weight
	N	N	mm/s	mm/s	mm	mm	V AC/DC	IP	kg
CC30	250	250	32/28	28/26	400	N/A	230/24	22	1,0

Type
Chain actuator

Supply voltage:
230 VAC
24 VDC

Color:
Silver EV1
Black
White

Options:
None

CC30-0400-[ ][ ][ ]-[ ]-00

230
024

S
B
W

00

VARIMAG CC40

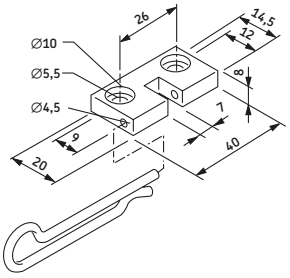

2094000100

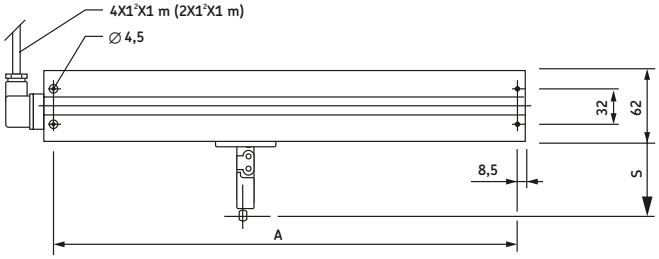

S	A	B	C
280	356	373	410
380	406	423	460

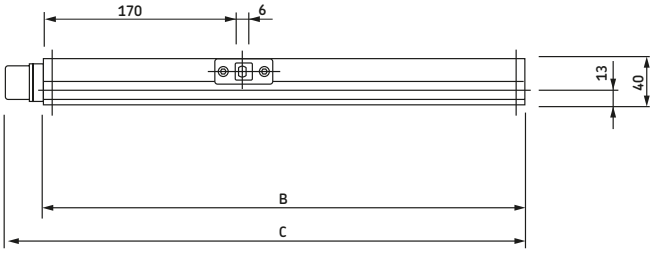

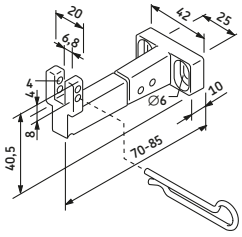

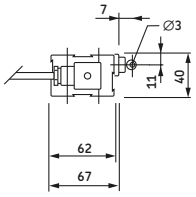

2094000300

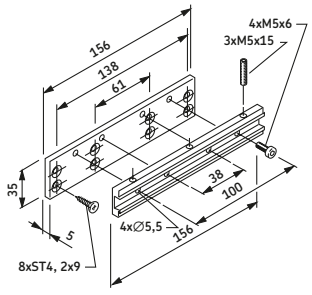

2094000100/2094000300

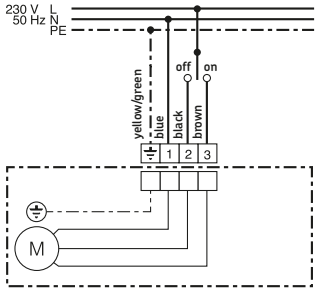

230 VAC

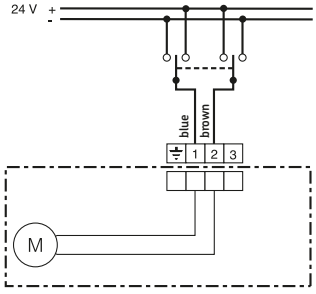

24 VDC

Type	Force push	pull	Max. speed no load	full load	Stroke (S)	Retr. length (L)	Voltage	Protection class	Weight
	N	N	mm/s	mm/s	mm	mm	V AC/DC	IP	kg
CC40	350	350	19	15	280-380	N/A	230/24	22	1,8

Type
Chain actuator

CC40 - □□□□ - □□□ - □ - 00

Stroke (S):
280 mm — 0280
380 mm — 0380

Supply voltage:
230 VAC — 230
24 VDC — 024

Color:
Silver EV1 — S
White RAL 9016 — W

Options:
None — 00

VARIMAG CC50

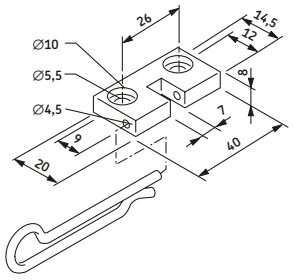

2094000100

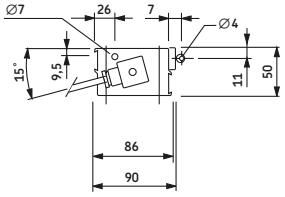

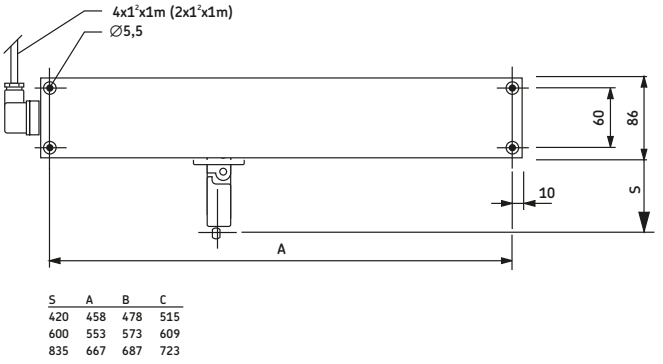

S	A	B	C
420	458	478	515
600	553	573	609
835	667	687	723

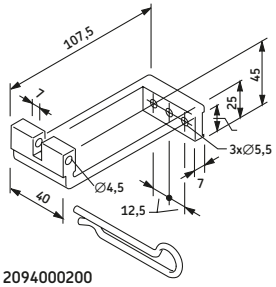

2094000200

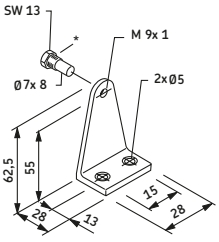

20971300

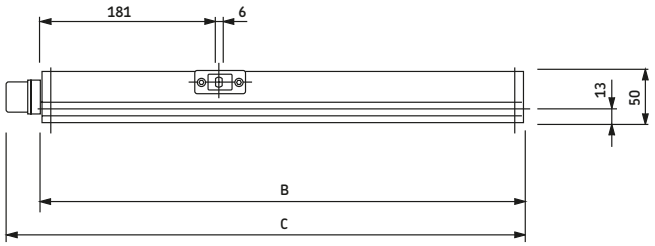

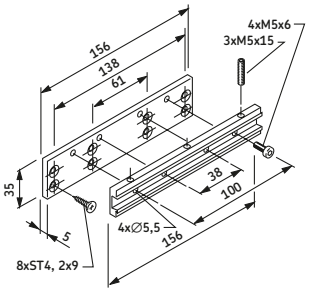

2094000100/2094000200

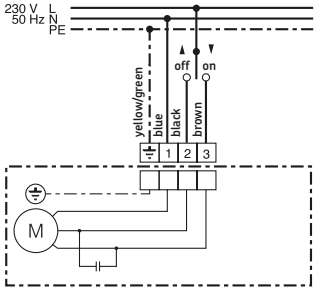

230 VAC

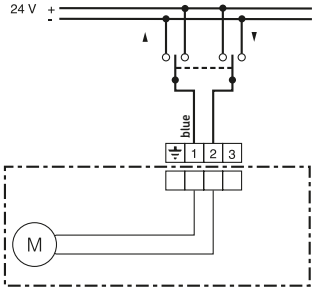

24 VDC

Type	Force push	pull	Max. speed no load	full load	Stroke (S)	Retr. length (L)	Voltage	Protection class	Weight
	N	N	mm/s	mm/s	mm	mm	V AC/DC	IP	kg
CC50	400	400	28/38	17/22	420/600	N/A	230/24	22	3,5
CC50 (S=835)	200	400	38	17	835	N/A	24	22	4,0

Type
Chain actuator

CC50 - [ ][ ][ ][ ] - [ ][ ][ ] - S - 00

Stroke (S):
420 mm 0420
600 mm 0600
835 mm 0835

Supply voltage:
230 VAC 230
24 VDC 024

Color:
Silver EV1 S

Options:
None 00

MAGRACK CK

MAGRACK rack actuators are designed for the building and construction segment, especially for large window applications. They are ideal for heavy-duty applications in corrosive environments. They are also extremely flexible to use as they have been designed to provide synchronized thrust at two, three or four points. Their ability to combine two motors to provide double thrust force should not be undervalued. The advance of the thrust points is always perfectly synchronized thanks to the mechanical link provided by the linking bar.

Benefits

- Compact and silent operation
- Cost-effective
- Lubricated for service life
- Easy to install
- Tandem operation possible
- Resistance to atmospheric agents



Type	Force push	pull	Max. speed no load	full load	Stroke (S)	Retr. length (L)	Voltage	Protection class	Weight
	N	N	mm/s	mm/s	mm	mm	V AC/DC	IP	kg
CK10	N/A	N/A	N/A	N/A	180 - 1 000	S+145	N/A	N/A	0,7-1,8
CK20	N/A	N/A	N/A	N/A	N/A	N/A	230/24	55	1,1
CK30	800/600	800/600	12/7	10/5	180-1 000	S+145	230/24	55	1,4/2,7
CK40	800/600	800/600	12/7	10/5	180-1 000	S+145	230/24	55	1,4/2,7
CK50	1 600/1 200	1 600/1 200	12/7	10/5	180-1 000	S+145	230/24	55	1,4/2,7

Type
Rack actuator

C K □□ - □□□□ - □□□ - □ - 0 0

Design model:

Rack without motor	10
Motor only	20
Rack with motor	30
Two (2) racks with one (1) motor (tandem system)*	40
Two (2) racks with two (2) motors (tandem system)*	50

*Linking bar not supplied, see code on the next page

Stroke (S):

180 mm	0180
230 mm	0230
350 mm	0350
550 mm	0550
750 mm	0750
1 000 mm	1000
Only motor CK 20	0000

Motor voltage:

Without motor (selection of CK 10)	000
230 VAC (not applicable for CK 10, max. force: 600 N)	230
24 VDC (not applicable for CK 10, max. force: 800 N)	024

Color:

Silver EV1	S
White RAL 9016 (only for CK 20)	W

Options:

None	00

MAGRACK CK - 24 VDC

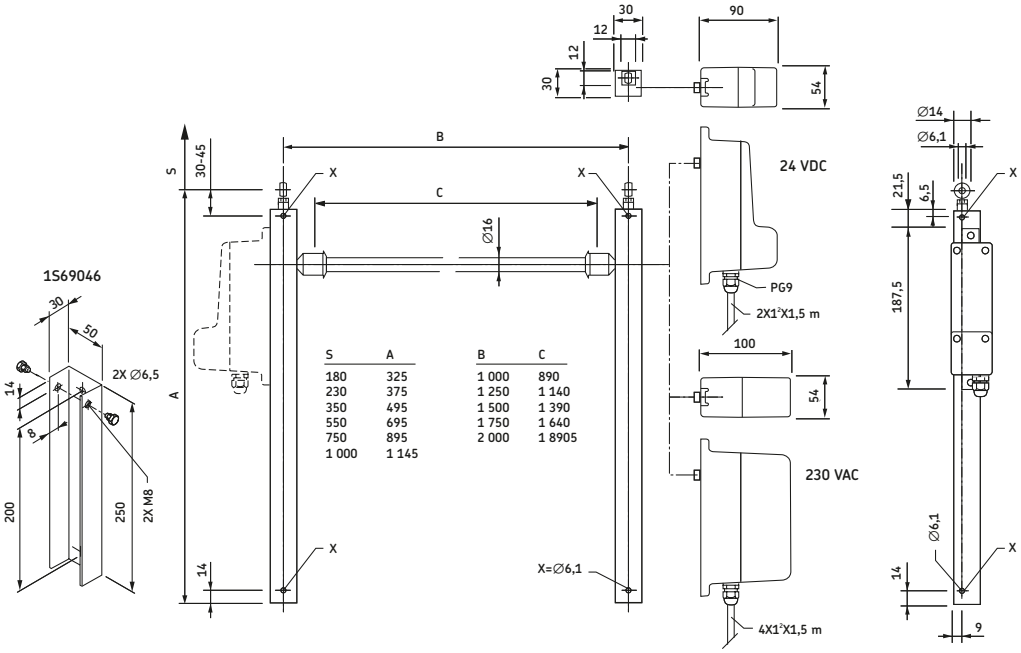

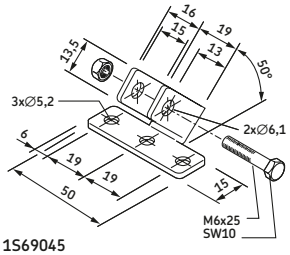

1S69045

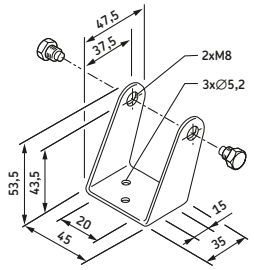

1S69048

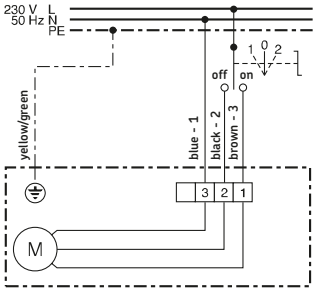

230 VAC

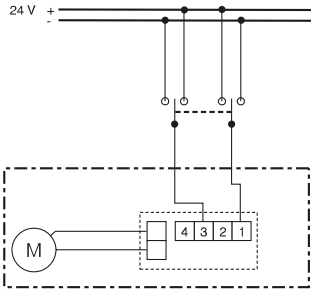

24 VDC

Notes

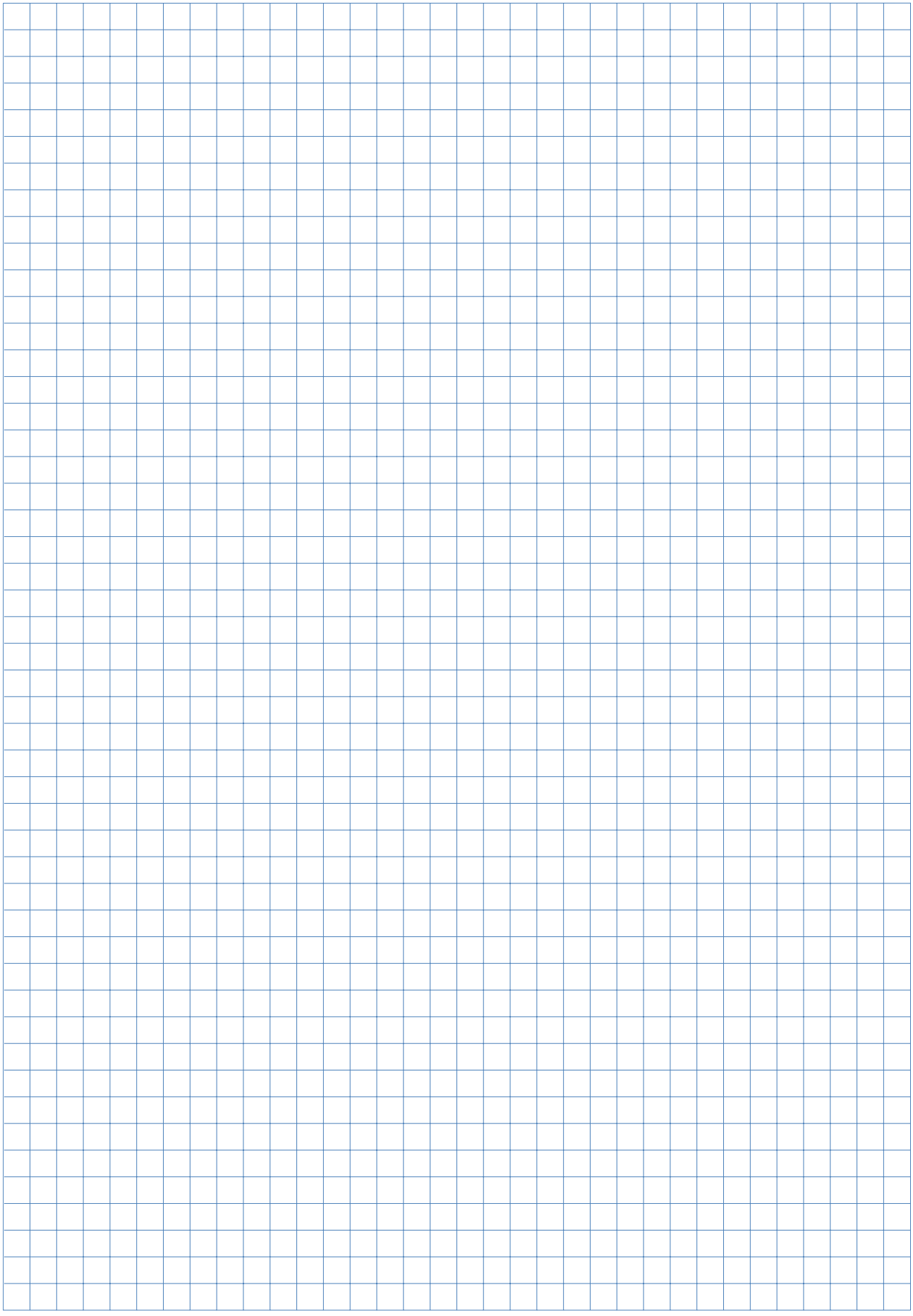

Notes



Notes

Notes



MAGDRIVE

Features
- Slim design
- Quiet
- High push force

Description
The MAGDRIVE is a very slender and robust DC actuator, characterized by its special gear technology designed for quiet operation. The standard version includes a back-up nut and limit switches.

The MAGDRIVE actuators are equipped with a fixed motor cable with a DIN8 plug or optionally with a jack-plug. As standard, the actuators have protection class IPX0, but as an optional extra, can also be supplied with IPX4S. It is suitable for numerous industrial, medical and domestic applications.

Accessories
Control boxes: MCU, BCU, SCU, VCU, LD
Operating units: EHA, STF, STA, STJ
Distributor box: ZVB



Technical data	Unit	MD22	MD23
Push force	N	6 000	6 000
Pull force	N	200 (static only)*	6 000
Speed	mm/s	8,5-15	8,5-15
Stroke	mm	50–700	50–700
Voltage	VDC	24	24
Current consumption	A	9 (at 6 000 N)	9 (at 6 000 N)
Duty cycle on/off	Int.	1 min./9 min.	1 min./9 min.
Ambient temperature	°C	+10 to +40	+10 to +40
Protection class	IP	X0/X4S	X0/X4S
Weight	kg	5	5
Colour	RAL	Natural anodized	Natural anodized

All data stated apply at room temperature
* for transportation purposes the actuator may be loaded with max. 200 N

MAGDRIVE

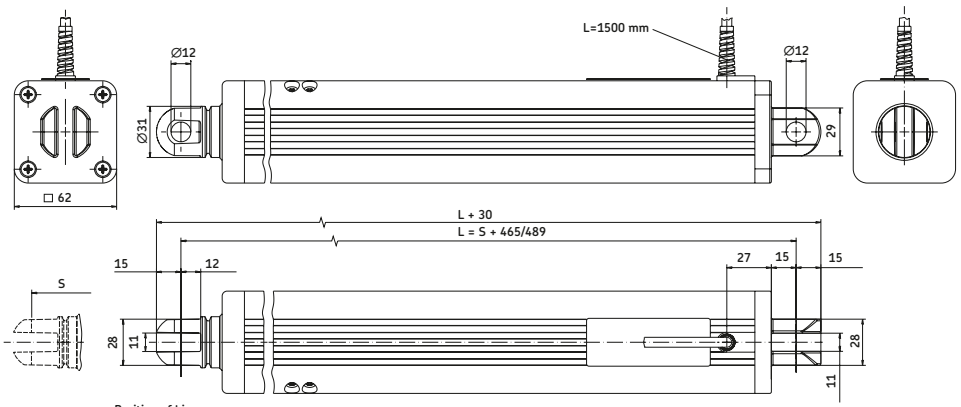

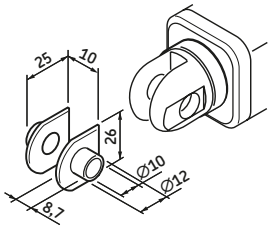

M	D	2	0	-				-							-		

Type

Retracted length L=S+465	2
Retracted length L=S+489	3

Stroke (L = S + 465 mm):

50 mm	050
100 mm	100
150 mm	150
200 mm	200
250 mm	250
300 mm	300
350 mm	350
400 mm	400
450 mm	450
500 mm	500
550 mm	550
600 mm	600
650 mm	650
700 mm	700
Other strokes	_ _ _

IP - Protection:

IIP0X	A
IPX4S	*B*

Motor cable:

Straight, 1,5 m, DIN8 plug	15
Straight, 1,5m, jack plug 180°	*0D*

Rear fork head / Hole diameter:

Standard 0°/12 mm	0
Rotated 90°/12 mm	*4*

Options 1:

No options	0
Electrical anti-pinching protection (safety switch, motor direction push, no extension to assembly dimension)	L
Electrical anti-pinching protection, safety switch, pull load	K

Options 2:

No options	0
Dual encoder (only available with DIN8 plug)	*F*

Options 3:

No options	-
Emergency lowering fork head bore (add 30 mm to retracted length "L")	V

Customization:

No options	00

Options written in italic fonts are not available as standard. Please contact SKF for verification.

MD4 series

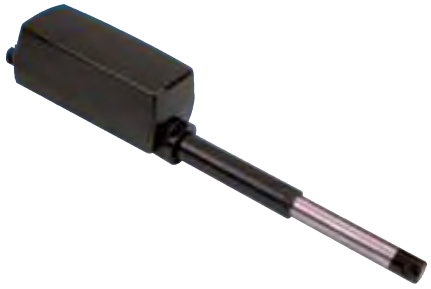

Features / Benefits

- Ambient temperature +5 °C to +40 °C
- Compact DC actuator
- Space saving installation
- Protection class IP66
- Rear clevis end (metal)
- Self-locking brake for “A3” and “A4” versions
- Two way integrated limit switch protection
- Low noise level
- Duty cycle max. 10 % or 6 min./hour at continuous use
- Comply with EN60601-1

Options

- Hall effect sensor

Performance diagram:

Speed vs Load (force)

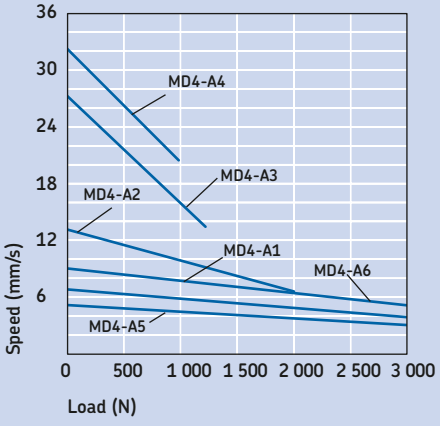

Current vs Load (force)

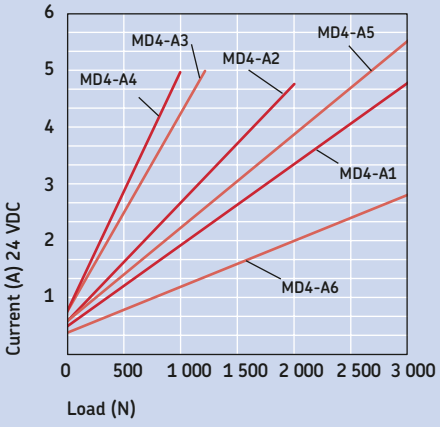

Type	Force push	pull	Max. speed no load	full load	Stroke (S)	Retr. length* (L)	Voltage	Protection class	Weight
	N	N	mm/s	mm/s	mm	mm	VDC	IP	kg
MD4-A1	3 000	0	6,7	3,7	100-400	S+174	24	66	3,5
MD4-A2	2 000	0	13	6,4	100-400	S+174	24	66	3,5
MD4-A3	1 200	0	25	13,4	100-400	S+174	24	66	3,5
MD4-A4	1 000	0	32	20	100-400	S+174	24	66	3,5
MD4-A5	3 000	0	8,5	5,0	100-400	S+174	24	66	3,5
MD4-A6	3 000	0	5,0	3,0	100-400	S+174	24	66	3,5

* See type key on next page.

MD4

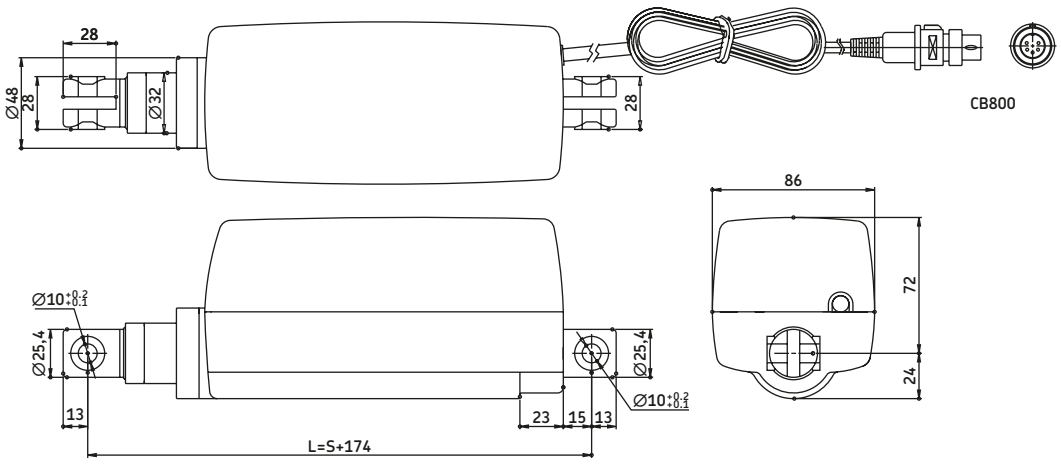

M D 4 A

Type

Load / Speed:

3 000 N / 6,7 mm/s	1
2 000 N / 13 mm/s	2
1 200 N / 25 mm/s	3
1 000 N / 32 mm/s	4
3 000 N / 8,5 mm/s	5
3 000 N / 5,0 mm/s	6

Stroke:

100 mm	100
150 mm	150
200 mm	200
250 mm	250
300 mm	300
400 mm	400
Other stroke lengths; 100<S<400 mm	XXX

Option 1:

Hall effect sensor	HS

Customized cable length options:

Specify requested cable length in dm	XX

FD series



Features / Benefits

- Ambient temperature -26 °C to ~+65 °C
- Protection class IP52
- Built-in limit switches (factory pre-set)
- Hall effect/Reed sensors
- Rear clevis can be turned 90°
- Compatible control boxes: CB200/300/800
- Duty cycle max. 10 % or 6 min./hour at continuous use

Performance diagram:

Speed vs Load (force)

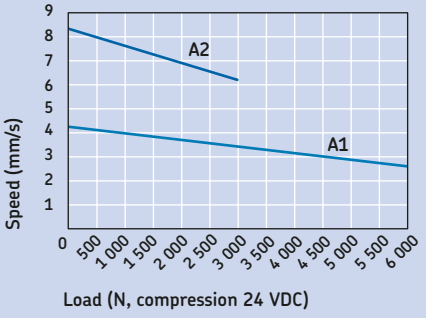

Current vs Load (force)

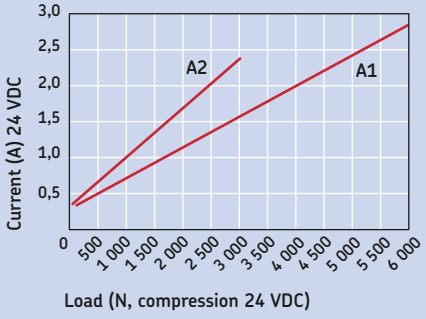

Type	Force push	pull	Max. speed no load	full load	Stroke (S)	Retr. length* (L1;L2)	Voltage	Protection class	Weight
	N	N	mm/s	mm/s	mm	mm	VDC	IP	kg
FD A1	6 000	4 000	4,2	2,6	50-300	-*	24	52	2,5
FD A2	3 000	2 000	8,2	6,2	50-300	-*	24	52	2,5

Dimensions in mm* Stroke	50	100	150	200	250	300
Retracted length (L1)	250	300	360	410	470	520
Retracted length (L2)	210	260	320	370	430	480

FD

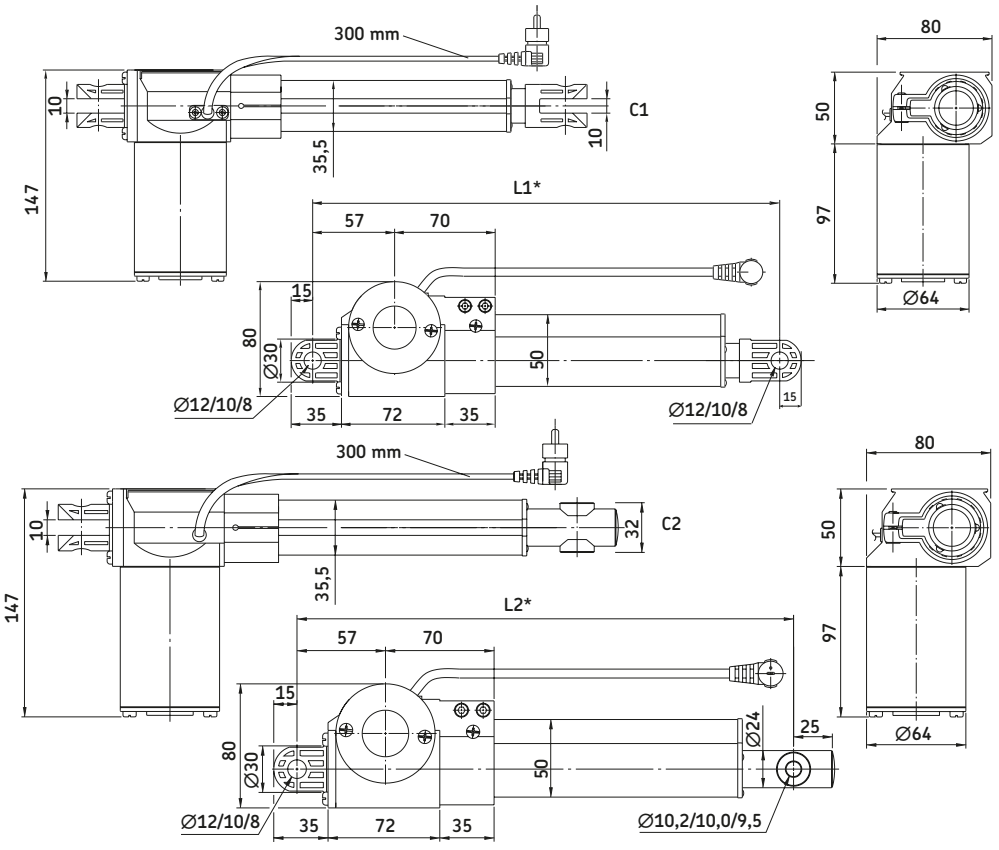

F D 2 4 A - □ - □ □ □ - □ □ - □ □ - □ - □ - □ □

Type

Load:

6 000 N	1
3 000 N	2

Stroke:

50 mm	050
100 mm	100
150 mm	150
200 mm	200
250 mm	250
300 mm	300
Other stroke lengths; 50<S<300 mm	XXX

Front attachment:

Plastic, Ø= 8,0, 10,0, or 12,0 mm	C1
Metal, Ø=9,5, 10,0 or 10,2 mm	C2

Option 2:

Hall effect sensor (resolution pulses/mm; A1=10, A2=5)	HS
Reed sensor (resolution pulses/mm; A1=1,25, A2=0,625)	RS

Option 3:

Connector for CB200S, CB300S	0
Connector for CB800	1
Connector for CAJC	2
Connector for MCU	3
No connector, open wires	N
Customized connector - contact SKF	C

Option 4 (front attachment):

Attachment type C1 Ø=12,0 mm; type C2 Ø=10,2 mm	1
Attachment type C1 and C2 Ø=10,0 mm	2
Attachment type C1 Ø=8,0 mm; type C2 Ø=9,5 mm	3

Customized cable length options:

Specify requested cable length in dm	XX

LD4 series



Features / Benefits

- Ambient temperature +5 °C to +40 °C
- Compact DC actuator
- Protection class IP51
- Space saving installation
- Actuator and converter for universal applications
- Clevis ends (metal)
- Self-locking brake for “A3” and “A4” versions
- Low noise level
- Duty cycle max. 10 % or 6 min./hour at continuous use

Options:

- Hall effect sensor

Performance diagram:

Speed vs Load (force)

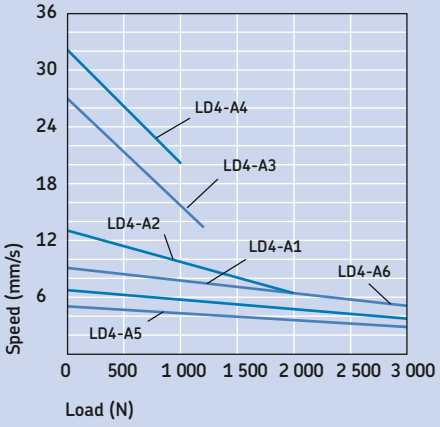

Current vs Load (force)

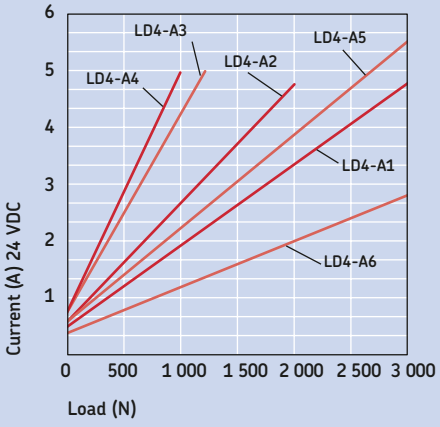

Type	Force push	pull	Max. speed no load	full load	Stroke (S)	Retr. length* (L)	Voltage	Protection class	Weight
	N	N	mm/s	mm/s	mm	mm	VDC	IP	kg
LD4-A1	3 000	3 000	6,7	3,7	100-400	S+174	24	51	2,5
LD4-A2	2 000	2 000	13	6,4	100-400	S+174	24	51	2,5
LD4-A3	1 200	1 200	25	13,4	100-400	S+174	24	51	2,5
LD4-A4	1 000	1 000	32	20	100-400	S+174	24	51	2,5
LD4-A5	3 000	3 000	8,5	5,0	100-400	S+174	24	51	2,5
LD4-A6	3 000	3 000	5,0	3,0	100-400	S+174	24	51	2,5

* Other retracted length - contact SKF

LD4

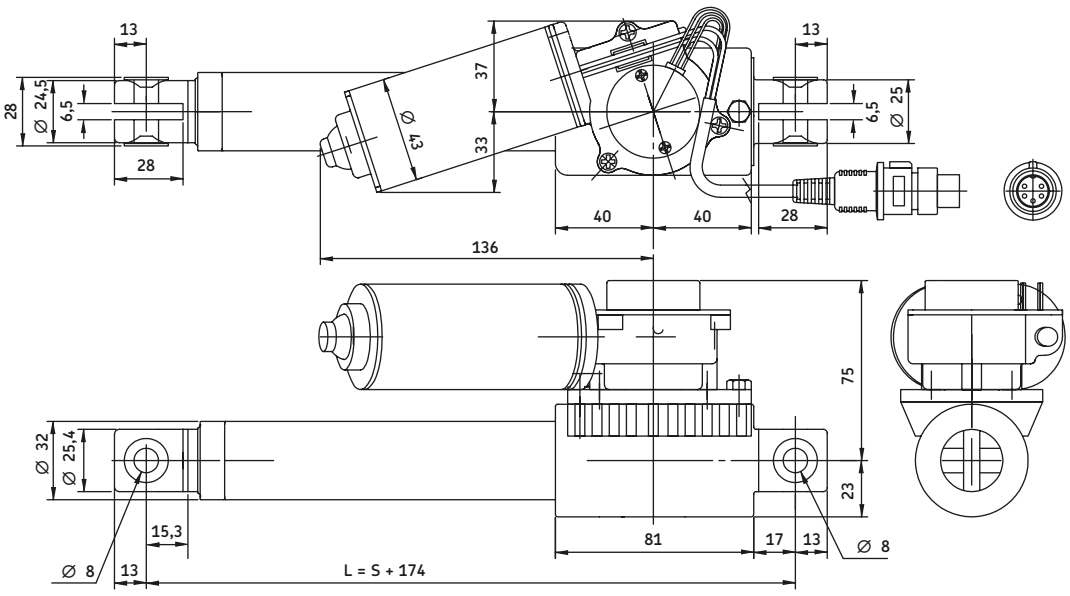

LD4A - □ - □□□ - □□ □

Type

Load / Speed:

3 000 N / 6,7 mm/s	1
2 000 N / 13 mm/s	2
1 200 N / 25 mm/s	3
1 000 N / 32 mm/s	4
3 000 N / 8,5 mm/s	5
3 000 N / 5,0 mm/s	6

Stroke:

100 mm	100
150 mm	150
200 mm	200
250 mm	250
300 mm	300
400 mm	400
Other stroke lengths; 100<S<400 mm	XXX

Option 1:

Hall effect sensor	HS

Customized cable length options:

Specify requested cable length in dm	XX

LD6 series



Features / Benefits

- Ambient temperature +5 °C to +40 °C
- Compact DC actuator
- Space saving installation
- Protection class IP51
- Actuator and converter for universal applications
- Clevis end (metal), die-cast
- Brake
- Low noise level
- Duty cycle max. 10 % or 6 min./hour at continuous use

Options:

- Limit switch
- Potentiometer (for S = 100-200 mm)

Performance diagram:

Speed vs Load (force)

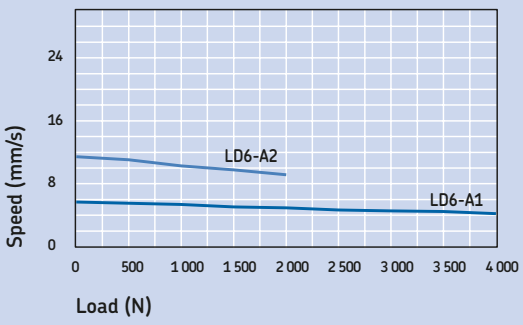

Current vs Load (force)

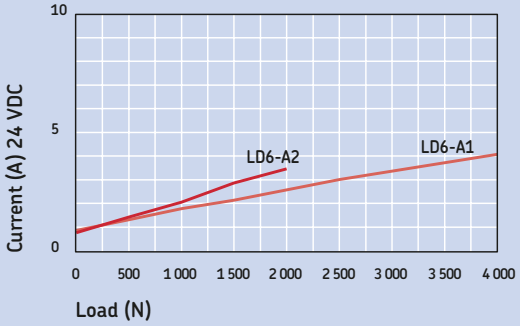

Type	Force push	pull	Max. speed no load	full load	Stroke (S)	Retr. length (L)	Voltage	Protection class	Weight
	N	N	mm/s	mm/s	mm	mm	VDC	IP	kg
LD6-A1	4 000	4 000	7	5	100-400	S+168	24	51	3,5
LD6-A2	2 000	2 000	13	11	100-400	S+168	24	51	3,5

LD6

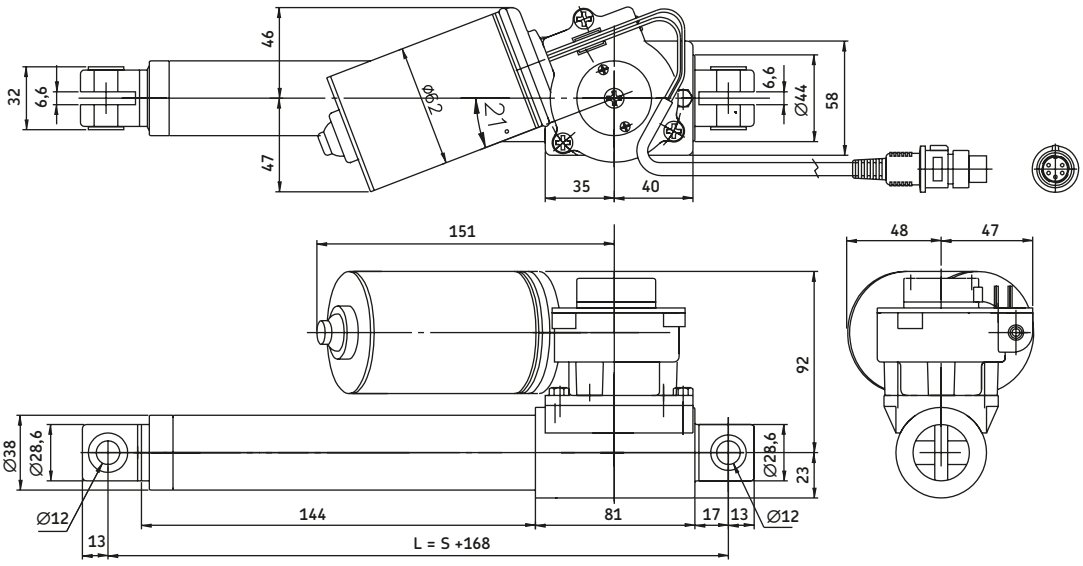

L D 6 - □□ - □□□ - □ □□

Type

Load:

4 000 N	A1
2 000 N	A2

Stroke:

100 mm	100
150 mm	150
200 mm	200
250 mm	250
300 mm	300
400 mm	400
Other stroke lengths; 100<S<400 mm	XXX

Option:

Limit switch + potentiometer (only for S=100-200 mm)	P

Customized cable length options:

Specify requested cable length in dm	XX

M series



Features / Benefits
- Designed for horizontal/vertical mounting
- Push or pull load
- Extension tube (stainless steel)
- Protection tube (aluminium)
- Anodized coating (natural)
- Duty cycle 20 %

Options
- Hall effect/Reed sensors

Performance diagram:

Speed vs Load (force)

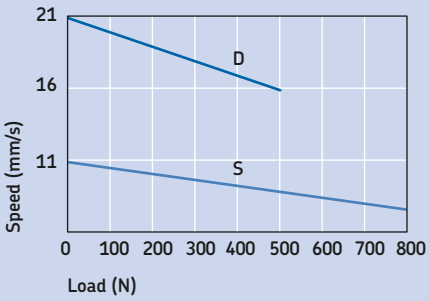

Current vs Load (force)

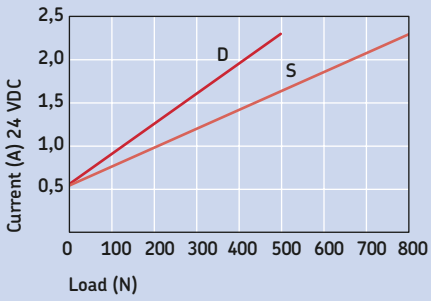

Type	Force push	pull	Max. speed no load	full load	Stroke* (S)	Retr. length (L)	Voltage	Protection class	Weight
	N	N	mm/s	mm/s	mm	mm	VDC	IP	kg
M24V-S	800	800	10,5	7,0	100-300	S+145	24	N/A	2,0
M24V-D	500	500	20	15	100-300	S+145	24	N/A	2,0

*Tolerance; S = +0 / -0,6 mm

M

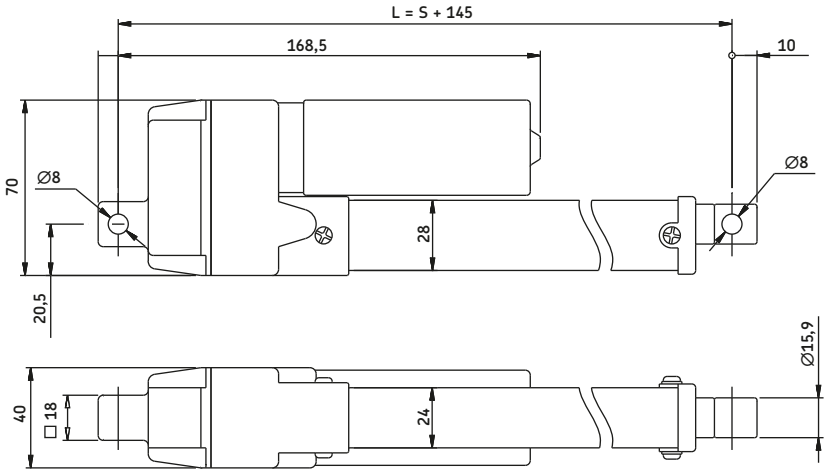

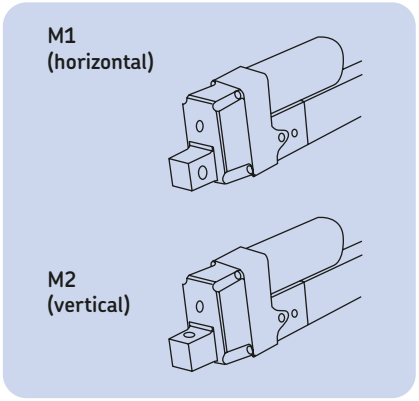

M 2 4 - □□ - □ - □□□ - □ □

Type

Voltage:
24 VDC 24

Mounting:
Horizontal M1
Vertical M2

Feedback:
No feedback N
Hall effect sensor H
Reed sensor R

Stroke:
100 mm 100
200 mm 200
300 mm 300
Other stroke lengths; 100<S<300 mm XXX

Load:
800 N S
500 N D

Customized cable length options:
Specify requested cable length in dm XX

IMD3 series

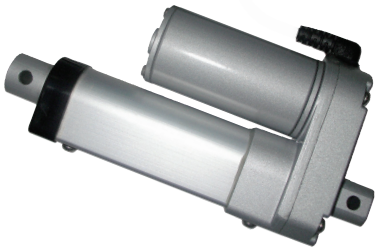

Features / Benefits

- Ambient temperature -15 °C to +65 °C
- Lubrication for longer lifetime
- Extension tube (aluminium)
- Protection tube (aluminium)
- Zinc alloy housing
- Powder metal gears
- Integrated limit switches
- Duty cycle 25 %

Options

- Potentiometer
- Front attachment, ∅=6,4 or 8,0 mm
- Protection class IP65

Performance diagram: (load versions; ”05”, ”10”, ”20” ”30” and ”40” - see type key on next page)

Speed vs Load (force)

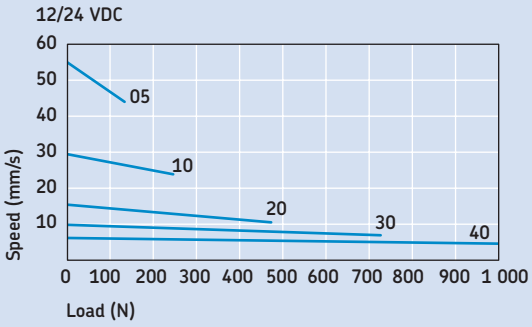

Current vs Load (force)

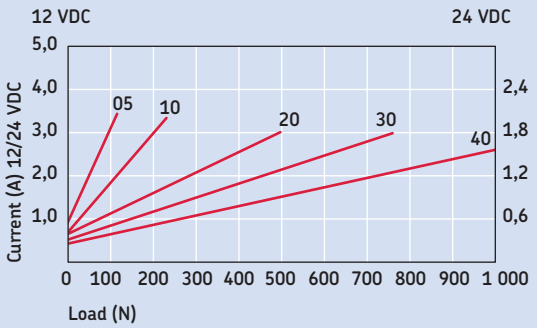

*** Current (A) for 36 VDC on request

Type	Force** push	pull	Max. speed no load	full load	Stroke (S)	Retr. length* (L1;L2)	Voltage	Protection class	Weight
	N	N	mm/s	mm/s	mm	mm	VDC	IP	kg
IMD3 05	120	120	57	45	50-300	-*	12/24/36	53/65	1,5
IMD3 10	240	240	30	22	50-300	-*	12/24/36	53/65	1,5
IMD3 20	500	500	17	12	50-300	-*	12/24/36	53/65	1,5
IMD3 30	750	750	10	8	50-300	-*	12/24/36	53/65	1,5
IMD3 40	1 000	1 000	8	6	50-300	-*	12/24/36	53/65	1,5

* See table on below
** Max. static load is 2 500 N

Dimensions in mm* Stroke	50	100	150	200	250	300
Retracted length (L1)	158	209	260	311	362	413
Retracted length (L2)	192	243	294	345	396	447

IMD3

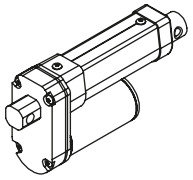

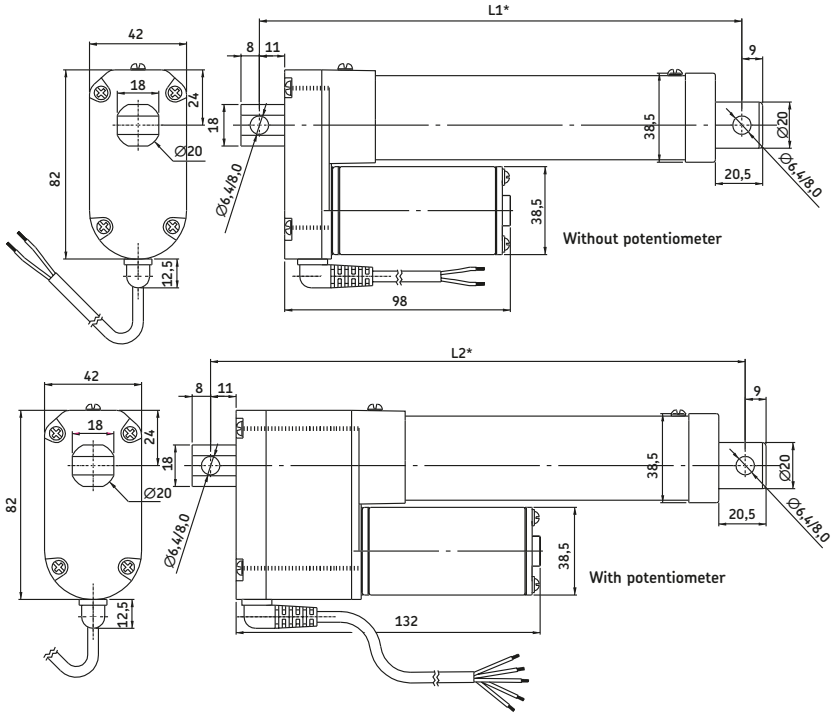

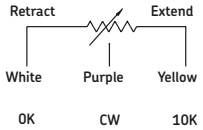

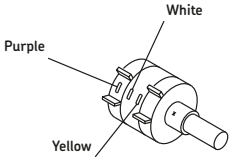

Potentiometer*** Stroke	50	100	150	200	250	300
0hm/mm	47,2	94,4	70,8	94,4	39,3	47,2

IMD3 - □□ - □□ - A - □□□ - □ - □□ - □ □

Type

Voltage:

12 VDC	12
24 VDC	24

Load:

120 N	05
240 N	10
500 N	20
750 N	30
1 000 N	40

Stroke:

50 mm	050
100 mm	100
150 mm	150
200 mm	200
250 mm	250
300 mm	300
Other stroke lengths; 50<S<300 mm	XXX

Option 1:

Potentiometer (10 kΩ)***	P

Option 2:

Protection class IP65	65

Option 3 (attachments):

Hole ∅=6,4 mm (standard)	1
Hole ∅=8,0 mm	2

Customized cable length options:

Specify requested cable length in dm	XX

ID8A series



Features / Benefits

- Ambient temperature -26 °C to +65 °C
- Well sealed (O-ring)
- Extension tube (steel), powder coated
- Protection tube (steel), powder coated
- Powder coated aluminium alloy housing
- Powder metal gears
- Enhanced corrosion resistance
- Overload protection (clutch)
- Lubricated for service life
- Robust, designed for tough environment
- Static load capacity 4 500 N
- Self-locking
- Duty cycle 25 %
- Certified (CE 55011)

Options

- Thermo protection

Performance diagram: (load versions; "10" and "20" - see type key on next page)

Speed vs Load (force)

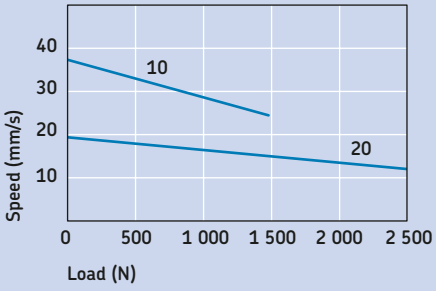

Current vs Load (force)

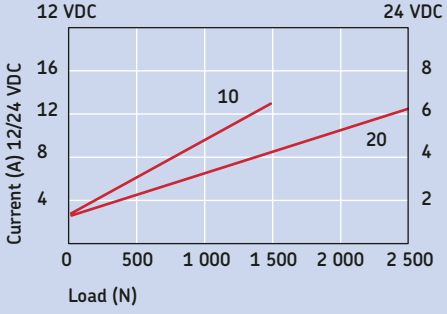

Type	Force push	pull	Max. speed no load	full load	Stroke (S1)	Retr. length* (L1)	Voltage	Protection class	Weight
	N	N	mm/s	mm/s	mm	mm	VDC	IP	kg
ID8A 10	1 500	1 500	38	25	100-600	-*	12/24	52/65	6,0
ID8A 20	2 500	2 500	20	13	100-600	-*	12/24	52/65	6,0

With limit switch* Stroke (mm)	100	150	200	300	450	600	Without limit switch** 100	150	200	300	450	600
L1 (Retracted length in mm)*	338	389	440	540	772	924	262	313	364	465	696	848
L2 (Retracted length in mm)*	376	427	473	578	810	962	300	351	402	503	734	886
S (Maximum travel in mm)*	102	153	203	305	457	610	102	153	203	305	457	610

* Tolerance; S and L = ± 5,0 mm

** Tolerance; L = ± 3,8 mm, S = ± 2,5 mm

Potentiometer*** Stroke	100	150	200	300	400	500
Ohm/mm	60,0	90,0	60,0	90,0	45,0	60,0

Linear actuators

ID8A

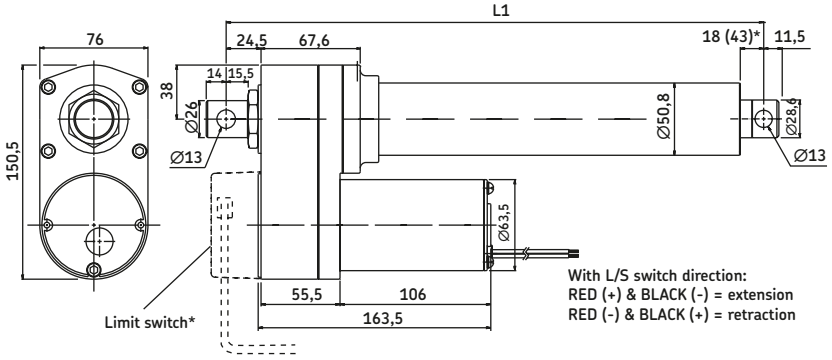

Different rear clevis mounting: C0-C5

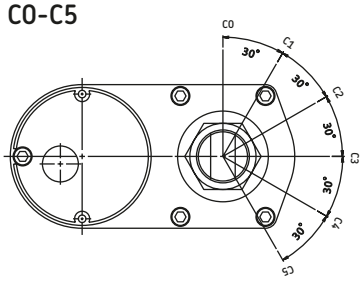

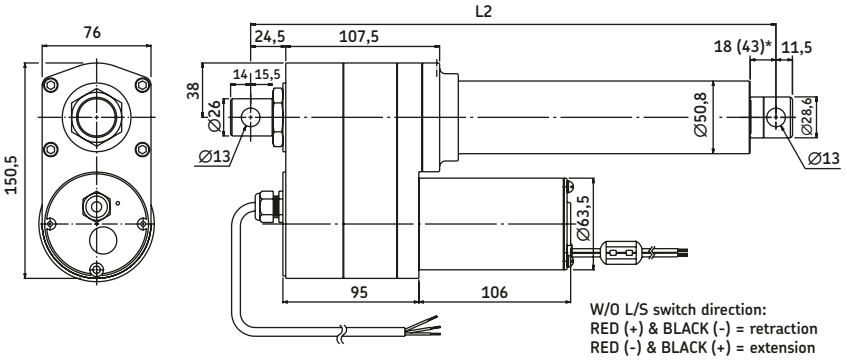

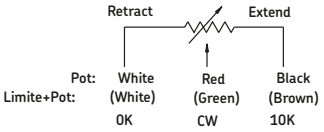

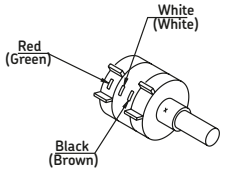

I D 8 A - □□ - □□ - □□□ - □ - □ - □□ - □ - □□ □

Type

Voltage:

12 VDC	12
24 VDC	24

Load:

1 500 N	10
2 500 N	20

Stroke:

100 mm	100
150 mm	150
200 mm	200
300 mm	300
450 mm	450
600 mm	600
Other stroke lengths; 100<S<600 mm	XXX

Option 1:

Limit switches (only for load version 20 and with IP52 and not in combination with "option 2")	L

Option 2:

Potentiometer (only IP52 and not in combination with "option 1")	P

Option 3:

Protection class, IP65	65

Option 4:

Thermo protection	T

Orientation rear attachment:

0°	C0
30°	C1
60°	C2
90°	C3
120°	C4
150°	C5

Customized cable length options:

Specify requested cable length in dm	XX

ID8B series



Features / Benefits

- Ambient temperature -26 °C to +65 °C
- High efficiency ball screw
- Well sealed (O-ring)
- Extension tube (stainless steel)
- Protection tube (steel), powder coated
- Powder coated aluminium alloy housing
- Powder metal gears
- Enhanced corrosion resistance
- Overload protection (clutch)
- Lubrication for service life
- Robust, designed for tough environment
- Static load capacity 13 600 N
- No back driving
- Duty cycle 25 %
- Certified (CE 55011)

Option

- Thermo protection
- Adjustable limit switches

Performance diagram: (load versions; ”05”, ”10” and ”20” - see type key on next page)

Speed vs Load (force)

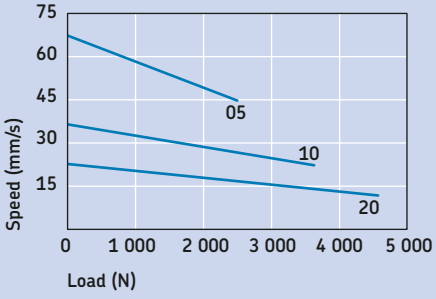

Current vs Load (force)

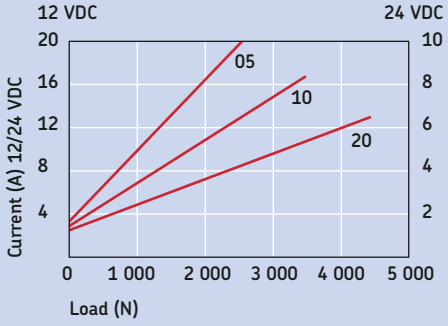

Type	Force push	pull	Max. speed no load	full load	Stroke (S1)	Retr. length* (L1)	Voltage	Protection class	Weight
	N	N	mm/s	mm/s	mm	mm	VDC	IP	kg
ID8B 05	2 300	2 300	65	45	100-600	-*	12/24	52/65	6,5
ID8B 10	3 500	3 500	36	22	100-600	-*	12/24	52/65	6,5
ID8B 20	4 500	4 500	22	13	100-600	-*	12/24	52/65	6,5

With limit switch* Stroke (mm)	100	150	200	300	450	600	Without limit switch** 100	150	200	300	450	600
L1 (Retracted length in mm)*	378	429	479	580	810	962	302	353	404	505	735	887
L2 (Retracted length in mm)*	416	467	517	618	848	1 000	340	391	442	543	773	925
S (Maximum travel in mm)*	98	150	201	302	457	610	98	150	201	302	457	610

* Tolerance; S and L = ± 5,0 mm

** Tolerance; L = ± 3,8 mm, S = ± 2,5 mm

Potentiometer*** Stroke	100	150	200	300	400	500
0hm/mm	60,0	90,0	60,0	90,0	45,0	60,0

ID8B

Different rear clevis mounting: C0-C5

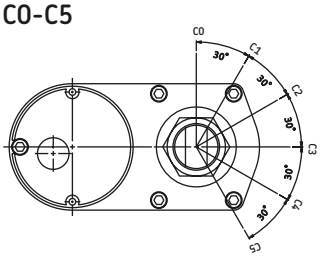

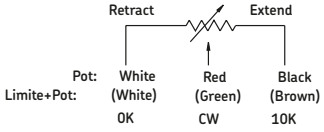

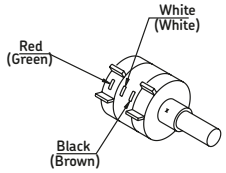

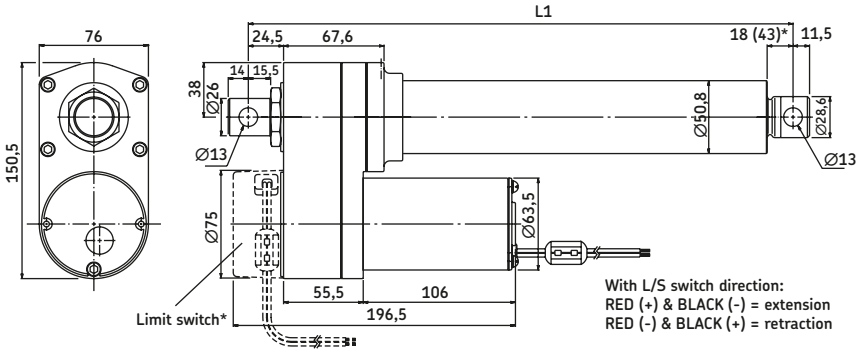

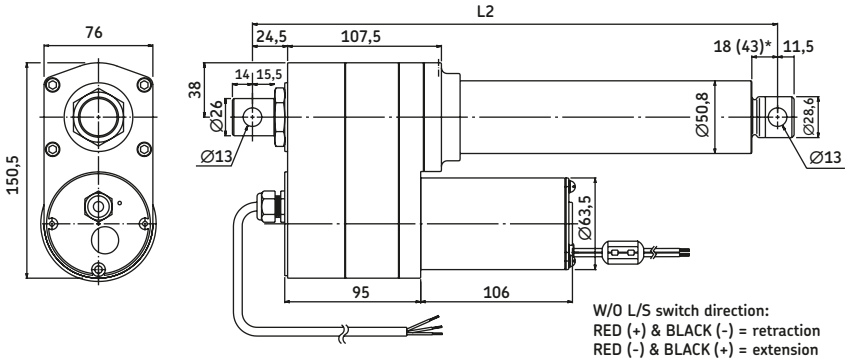

I D 8 B - □□ - □□ - □□□ - □ - □ - □□ - □ - □□ □

Type

Voltage

12 VDC	12
24 VDC	24

Load (N)

2 300	05
3 500	10
4 500	20

Stroke

100 mm	100
150 mm	150
200 mm	200
300 mm	300
450 mm	450
600 mm	600
Other stroke lengths; 100 < S < 600 mm	XXX

Option 1

Limit switches (only for load version 20 and with IP52 and not in combination with "option 2")	L

Option 2

Potentiometer (only IP52 and not in combination with "option 1")	P

Option 3

Protection class, IP65	65

Option 4

Thermo protection	T

Orientation rear attachment

0°	C0
30°	C1
60°	C2
90°	C3
120°	C4
150°	C5

Customized cable length options:

Specify requested cable length in dm	XX

IA4A series



Features / Benefits

- Ambient temperature -26 °C to +65 °C
- Motor with thermal protection
- Well sealed by O-ring
- Extension tube (stainless steel)
- Protection tube (steel), powder coated
- Powder coated aluminium alloy housing
- Powder metal gears
- Enhanced corrosion resistance
- Overload protection (clutch)
- Lubricated for service life
- Robust, designed for tough environment
- Static load capacity 4 500 N
- Self-locking
- Duty cycle 25 %

Option

- Adjustable limit switches

Performance diagram: (load versions; "10" and "20" - see type key on next page)

Speed vs Load (force)

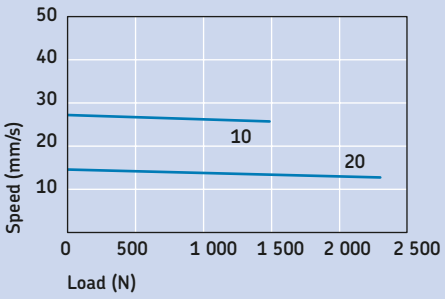

Current vs Load (force)

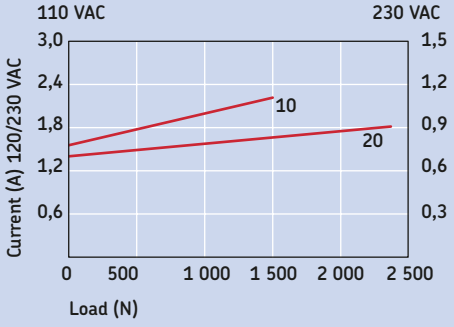

Type	Force push	pull	Max. speed no load	full load	Stroke (S)	Retr. length* (L)	Voltage	Protection class	Weight
	N	N	mm/s	mm/s	mm	mm	VAC	IP	kg
IA4A 10	1 500	1 500	29	25	100-600	-*	110/230	51	8,5
IA4A 20	2 300	2 300	16	14	100-600	-*	110/230	51	8,5

With limit switch* Stroke (mm)	100	150	200	300	450	600	Without limit switch** 100	150	200	300	450	600
L1 (Retracted length in mm)*	456	506	556	658	810	962	380	431	481	583	735	887
L2 (Retracted length in mm)*	494	544	594	696	848	1 000	418	469	519	621	773	925
S (Maximum travel in mm)*	102	153	203	305	457	610	102	153	203	305	457	610

* Tolerance; S and L = ± 5,0 mm

** Tolerance; L = ± 3,8 mm, S = ± 2,5 mm

Potentiometer*** Stroke	100	150	200	300	400	500
0hm/mm	60,0	90,0	60,0	90,0	45,0	60,0

Linear actuators

IA4A

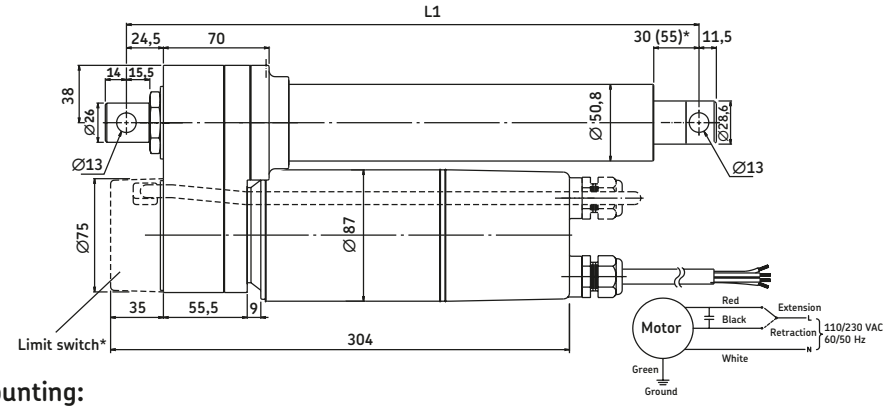

Different rear clevis mounting: C0-C5

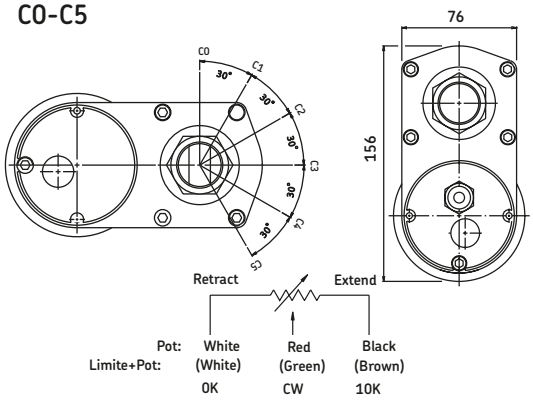

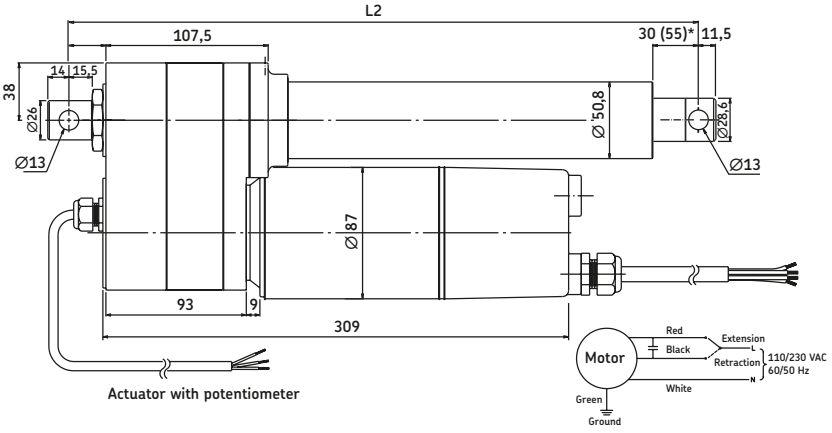

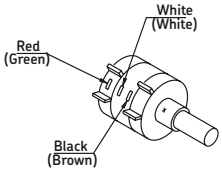

IA4A -		-		-		-		-		-		

Type

Voltage:

110 VAC	110
230 VAC	230

Load:

1 500 N	10
2 300 N	20

Stroke:

100 mm	100
150 mm	150
200 mm	200
300 mm	300
450 mm	450
600 mm	600
Other stroke lengths; 100<S<600 mm	XXX

Option 1:

Limit switches (only for load version 20)	L

Option 2:

Potentiometer	P

Option 3:

Thermo protection	T

Orientation rear attachment:

0°	C0
30°	C1
60°	C2
90°	C3
120°	C4
150°	C5

Customized cable length options:

Specify requested cable length in dm	XX

IA4B series



Features / Benefits

- Ambient temperature -26 °C to +65 °C
- High efficiency ball screw
- Motor with thermal protection
- Well sealed by O-ring
- Extension tube (stainless steel)
- Protection tube (steel), powder coated
- Powder coated aluminium alloy housing
- Powder metal gears
- Enhanced corrosion resistance
- Overload protection (clutch)
- Lubricated for service life
- Robust, designed for tough environment
- Static load capacity 13 600 N
- No back driving
- Duty cycle 25 %

Option

- Adjustable limit switches

Performance diagram: (load versions - see type key)

Speed vs Load (force)

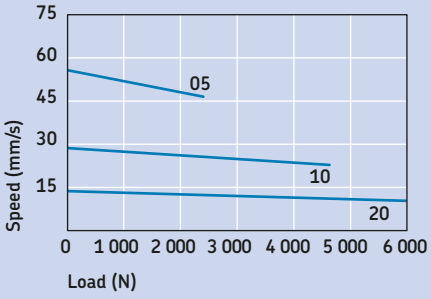

Current vs Load (force)

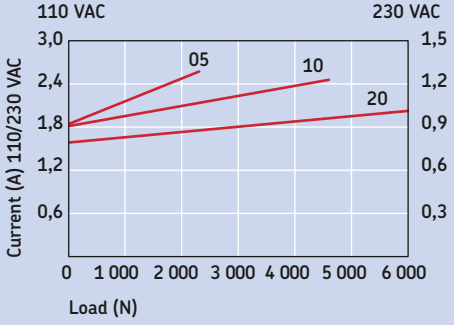

Type	Force push	pull	Max. speed no load	full load	Stroke (S)	Retr. length* (L)	Voltage	Protection class	Weight
	N	N	mm/s	mm/s	mm	mm	VAC	IP	kg
IA4B 05	2 300	2 300	57	46	100-600	-*	110/230	51	9,0
IA4B 10	4 500	4 500	29	25	100-600	-*	110/230	51	9,0
IA4B 20	6 000	6 000	15	12	100-600	-*	110/230	51	9,0

With limit switch* Stroke (mm)	100	150	200	300	450	600	Without limit switch** 100	150	200	300	450	600
L1 (Retracted length in mm)*	456	506	556	658	810	962	380	431	481	583	735	887
L2 (Retracted length in mm)*	494	544	594	696	848	1 000	418	469	519	621	773	925
S (Maximum travel in mm)*	102	153	203	305	457	610	102	153	203	305	457	610

* Tolerance; S and L = ± 5,0 mm

** Tolerance; L = ± 3,8 mm, S = ± 2,5 mm

Potentiometer*** Stroke	100	150	200	300	400	500
Ohm/mm	60,0	90,0	60,0	90,0	45,0	60,0

IA4B

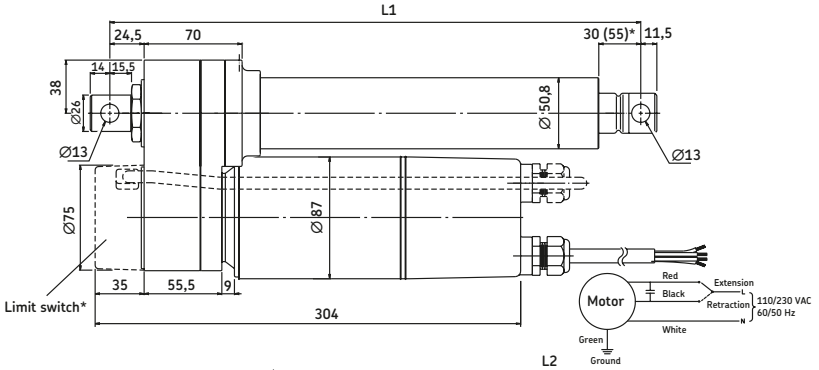

Different rear clevis mounting: C0-C5

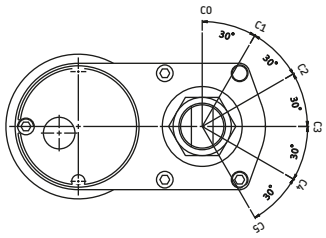

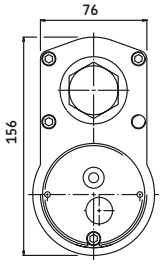

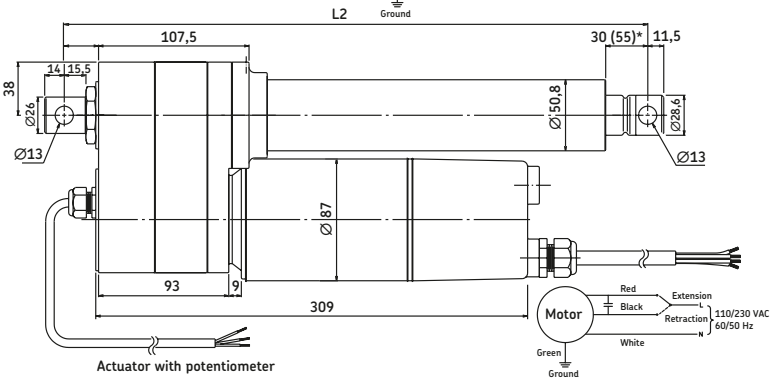

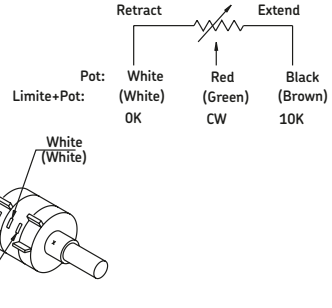

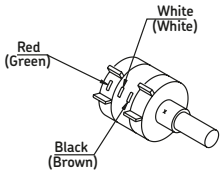

IA4B -		-		-		-		-		

Type

Voltage:

110 VAC	110
230 VAC	230

Load:

2 300 N	05
4 500 N	10
6 000 N	20

Stroke:

100 mm	100
150 mm	150
200 mm	200
300 mm	300
450 mm	450
600 mm	600
Other stroke lengths; 100<S<600 mm	XXX

Option 1:

Limit switches (only for load version 20)	L

Option 2:

Potentiometer	P

Orientation rear attachment:

0°	C0
30°	C1
60°	C2
90°	C3
120°	C4
150°	C5

Customized cable length options:

Specify requested cable length in dm	XX

SJ 25, 35, 45 series (AC actuator)

Features / Benefits

- Motor with thermal protection (+120±5 °C)
- Acme screw
- Self-locking
- Integrated limit switches
- Gear box (metal)
- Duty cycle 17%
- UL approved E128837 CSA certificate: LR92531 (115 VAC), E226168 (230 VAC)



Performance diagram: (load versions - see type key)

Speed vs Load (force)

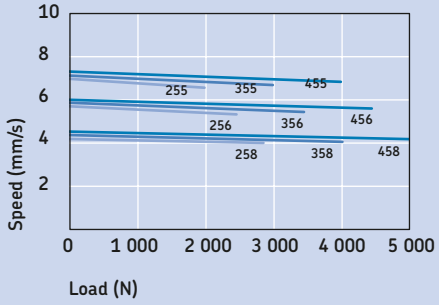

Current vs Load (force)

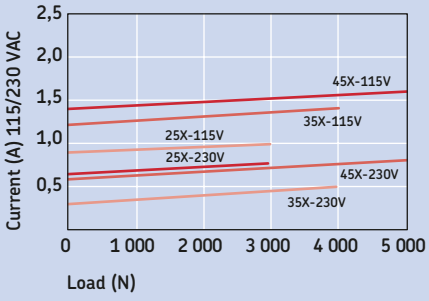

Type	Force push	pull	Max. speed no load	full load	Stroke* (S)	Retr. length** (L)	Voltage	Protection class	Weight
	N	N	mm/s	mm/s	mm	mm	VAC	IP	kg
SJ 255	2 000	2 000	7,2	6,6	100-600	S + 190/200/215	115/230	N/A	4,0
SJ 256	2 500	2 500	6,0	5,5	100-600	S + 190/200/215	115/230	N/A	4,0
SJ 258	3 000	3 000	4,5	4,0	100-600	S + 190/200/215	115/230	N/A	4,0
SJ 355	3 000	3 000	7,2	6,6	100-600	S + 190/200/215	115/230	N/A	4,5
SJ 356	3 500	3 500	6,0	5,5	100-600	S + 190/200/215	115/230	N/A	4,5
SJ 358	4 000	4 000	4,5	4,0	100-600	S + 190/200/215	115/230	N/A	4,5
SJ 455	4 000	4 000	7,2	6,6	100-600	S + 190/200/215	115/230	N/A	5,0
SJ 456	4 500	4 500	6,0	5,5	100-600	S + 190/200/215	115/230	N/A	5,0
SJ 458	5 000	5 000	4,5	4,0	100-600	S + 190/200/215	115/230	N/A	5,0

* Max. stroke for the tube version "I" is 250 mm.
** For clevis mounting; "01" and "05" L=S+190 mm, "02" L=S+215 mm, "03" and "04" L=S+200 mm.

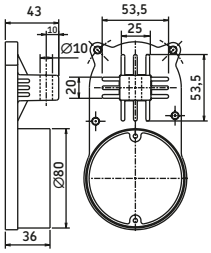

01 Mounting

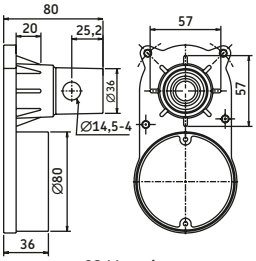

02 Mounting

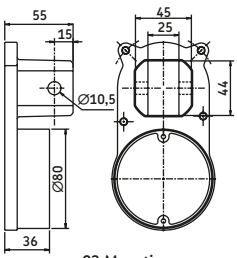

03 Mounting

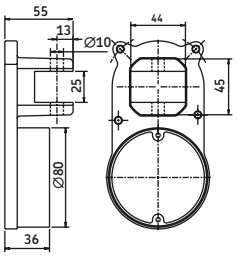

04 Mounting

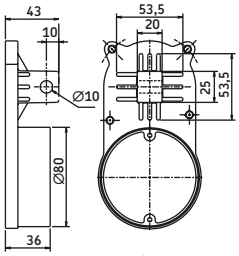

05 Mounting

SJ 25, 35, 45 series

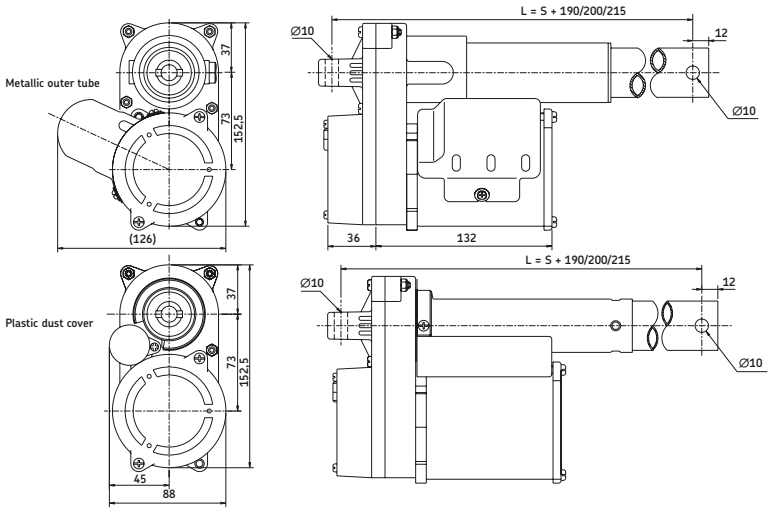

| | | |

Notes

Notes



Notes

Notes



Notes

Notes

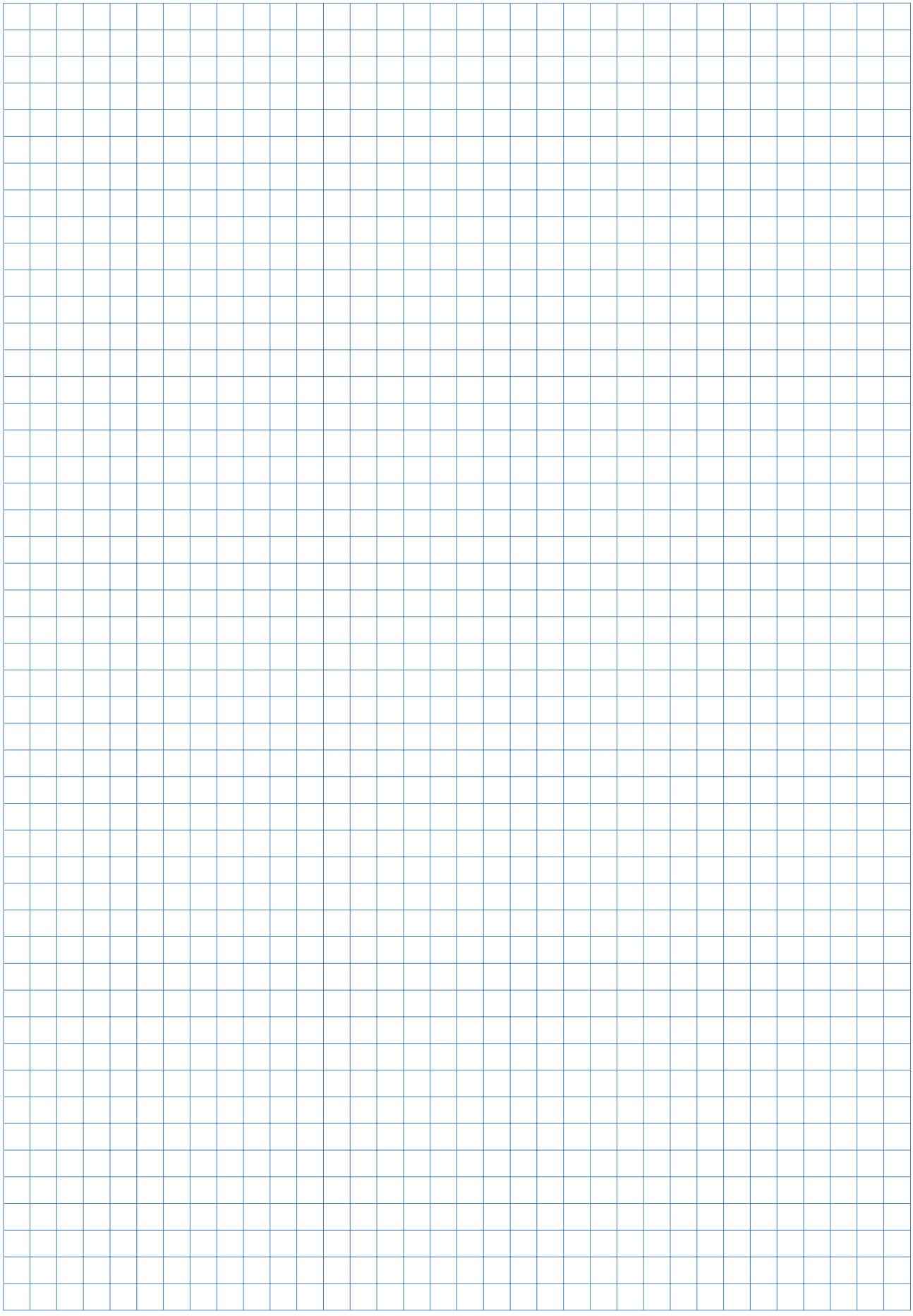

Rotary actuators



CRAB 17
The CRAB 17 rotary actuator is modular so that critical components can be interchanged to meet the needs of a special design priority. The purpose with CRAB 17 is designed to be small and compact but still be able to produce high torque. As the actuator can withstand high loads it can also serve as a load-bearing element of your design. Special bearings arrangements are not usually required.

Benefits
- Multiple output shafts
- Multiple motor options
- Small and compact

Type	Max. torque	Max. speed	Size	Working range	Voltage	Protection class	Weight
	Nm	rpm	mm	degrees	V AC/DC	IP	kg
CRAB 17	70	8	125	multi turn	120/230 AC	20/44	3
CRAB 17	105	20	125	multi turn	12/24/90 DC	20/44	3

Standard shaft design

Type key code: 1

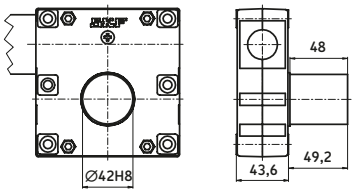

Type key code: 2

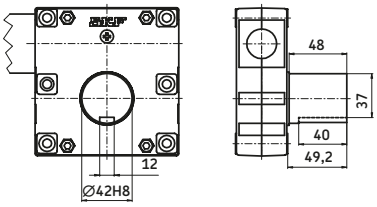

Type key code: 3

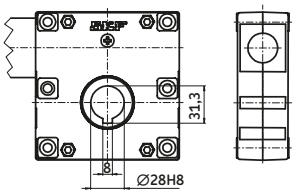

Type key code: 4

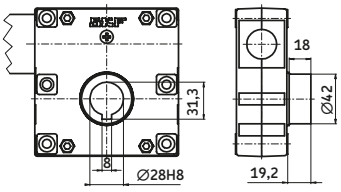

Limit switch

Type key code: 5

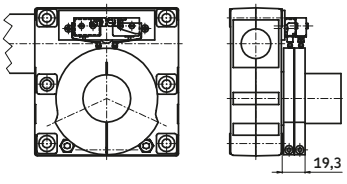

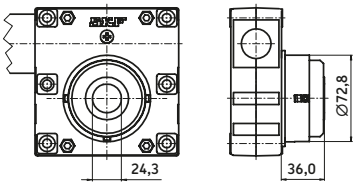

Type key code: 5

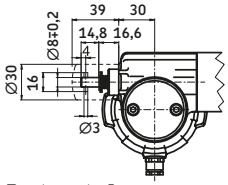

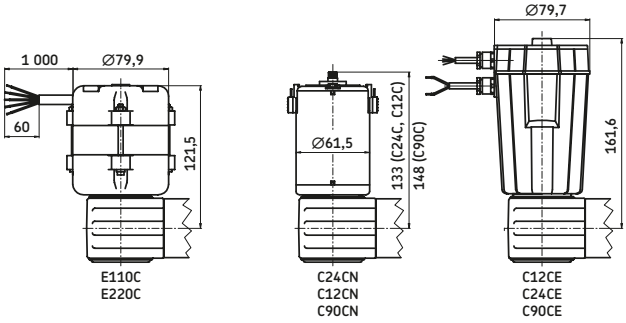

CRAB 17

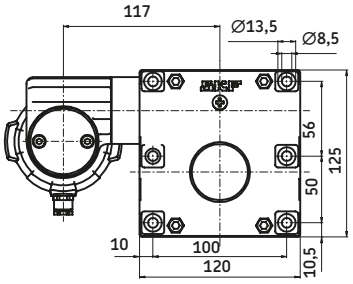

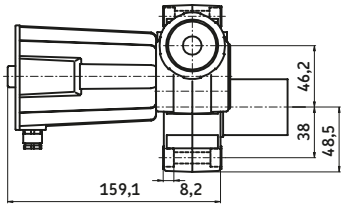

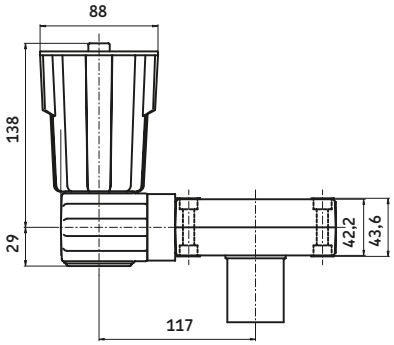

CRAB 17X - X 1- X RL / CXXC -

Dynamic load (N) /Speed (mm/s)			Motor options	
60/30	38/58	19/110	12 VDC	C12C
60/30	38/58	19/110	24 VDC	C24C
105/30	53/55	38/110	90 VDC	C90C
70/13	40/27	22/52	120 VAC/60 Hz	E110C
55/13	34/27	18/52	230 VAC/50 Hz	E220C
1	2	4		

C R A B 1 7 X [ ] [ ] X [ ] [ ] X [ ] [ ] / [ ] [ ]

Type

Manual override:

None	-
Hand crank	A
Release on shaft	B

Shaft design:

Solid	1
Solid / keyway	2
Hollow / keyway	3
Hollow / keyway for limit switch	4
Hollow / splines (with override for shaft type “B ”)	5
Customer specification	6

Limit switch:

No	-
Yes (fits shaft N° 1, 2, 4 and 5)	S

Motor orientation:

Rear	R
Upwards	U
Front	F
Downwards	D

Motor assembly:

Right	R
Left	L

Options for CxxC motors:

No cable	-
Encoder	E
Motor without cover	N
EMC filter	M
Straight, 2,0 m	T2
Jack plug, 2,0 m	T2P

CRAB 05

The design of the CRAB 05 rotary actuator series has been developed from a completely new recliner technology. This recliner technology is a new patent and has been successfully used in the automotive industry for car seat applications. Car seat applications demand low cost, high operation, high impact strength and ease of operation, electrically or manually, when adjusting the seat. This design makes it possible to build low cost and space saving solutions in applications where dynamic force demands are below 100 Nm.



Benefits

- Recliner
- Multiple motor options
- Thin and small

Type	Max. torque	Max. speed	Size	Working range	Voltage	Protection class	Weight
	Nm	rpm	mm	degrees	V DC	IP	kg
CRAB 05	100	3	86	multi turn	24	20	0,5

CRAB 05

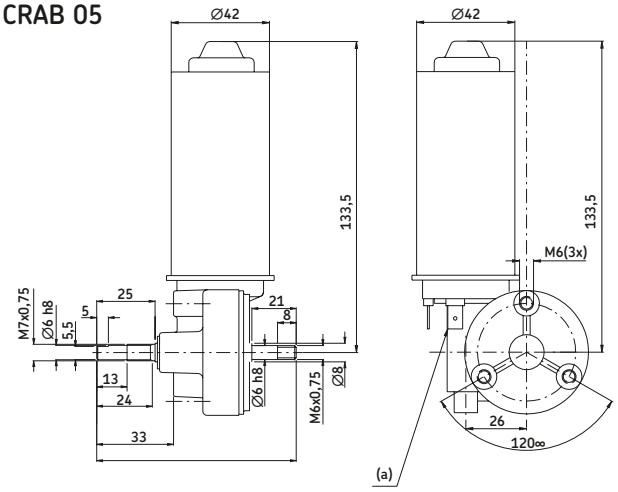

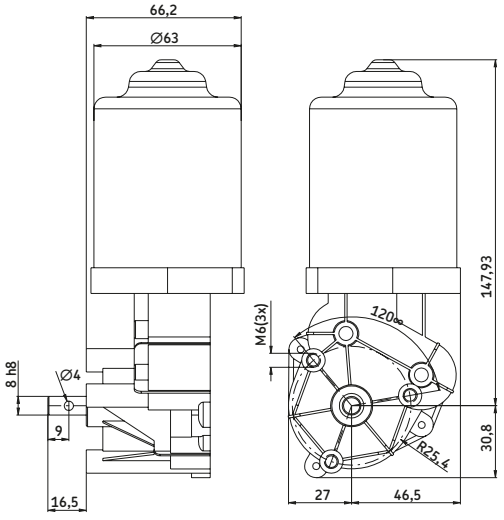

Motor MH

Fig, A

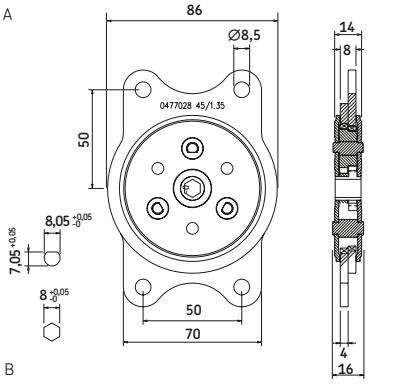

Fig, B

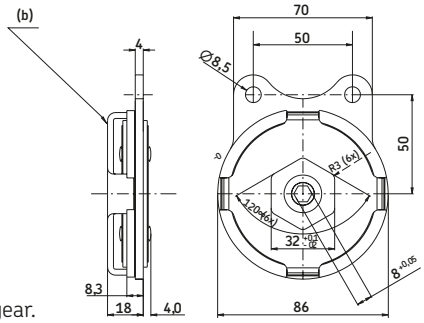

Motor MD

Legend:
(a)= Blade terminal
6,3 x 0,8 DIN 46244
(b)= Drive cross not fixed to gear.
Hardened 45HRC

Connecting shaft SH

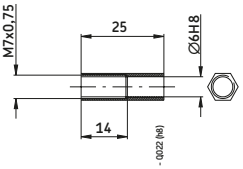

Connecting shaft SD

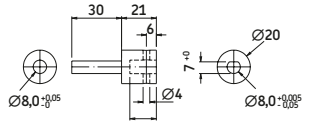

C R A B 0 5 _ _ _ _ _

Type

Coating:
Black chromium-plated — B
Natural chromium-plated — C

Motor shaft connection:
D-hole — H
Hexagonal hole — D

Attachment/connection:
Outer connection ears (see Fig.A) — E
Centre connection hexagonal 32 mm (see Fig.B only option “C ” and “H ”) — S

Motors:
No motor — 00
24 VDC for motor shaft connection “D ” — MD
24 VDC for motor shaft connection “H ” — MH

Connection shaft:
No shaft — 00
D-shaft — SD
Hexagonal shaft — SH

Notes



Control units

A large variety of control units is available to operate the linear drives and telescopic pillars. They allow the connection of up to 5 actuators or several external options. There is also a version to operate battery powered DC actuators. For combinations of actuators and control units please see the matrix on page 16.

Benefits

- Application focused system control
- Operation of up to 5 actuators
- Connections for foot, hand or desk switches
- Basic functions or encoder processing versions



Control units	Type	Control	Max. motor connections	Input	Output
			n°	V	V/A
KOM	KOM 1	Basic functions	4	230/120	24/6
	KOM 2	Encoder processing	5	230/120	24/6 or 12
	KOM 3	Basic functions	3	230/120	24/6
	KOM 3T	Basic functions	2	230/120	24/9
	KOM 6	Encoder processing	4	230/120	24/6 or 12
MCU	MCU	Basic functions	2	24	24/6
LD	LD-015	Encoder processing	2	230/120	24/10
	LD-014	Encoder processing	4	230/120	24/12
SEM	SEM 1	Basic functions	4	230/120	24/5
CAEN	10R	Basic functions	1	230/120	24/1-10
	15	Basic functions	1	230	24/15
CAEV	110/220	Basic functions	1	230/120	400/200
CAED ANR	5-24R-P0	Encoder processing	1	22 - 28	24/5
	9-24R-P0	Encoder processing	1	22 - 28	24/9
CAED	3-24R	Basic functions	1	24	24/3
	5-24R	Basic functions	1	24	24/5
	9-24R	Basic functions	1	24	24/9
CAEP	10P-SL	Basic functions	1	230	24/2-10
	8V	Basic functions	1	230	24/10
CAEL	10-24R	Basic functions	1	230	24/2-10
BCU	4/5/8/9	Basic functions	3	230/120	24/7
SCU	SCU1	Encoder processing	6	22-40	24/30
	SCU4	Encoder processing	6	120	24/18
	SCU5	Encoder processing	6	120	24/18
	SCU8	Encoder processing	6	230	24/18
	SCU9	Encoder processing	6	230	24/18
VCU	VCU1	Encoder processing	5	24	24/30
	VCU4	Encoder processing	5	120	24/7
	VCU5	Encoder processing	5	120	24/18
	VCU8	Encoder processing	5	230	24/7
	VCU9	Encoder processing	5	230	24/18

KOM1

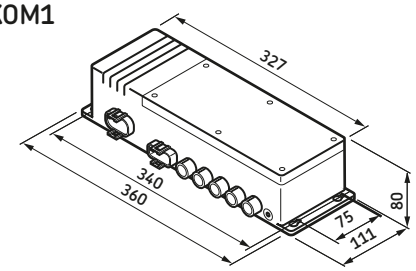

Type	Control	Max. motor connections	Input	Output
		n°	VAC	V/A
KOM 1	Basic functions	4	230/120	24/6

KOM1 □ - □□ 0A - 000

Type

Number of channels:

1 channel	1
2 channels	2
3 channels	3
4 channels	4
2-channel with customized current cut-off	A
3-channel with customized current cut-off	B
4-channel with customized current cut-off	C

Battery option:

No battery	0
With battery and charge circuit (not possible with enhanced power)	1
With charge circuit for external battery	3

Voltage:

230 VAC, 50/60 Hz	1
120 VAC, 50/60 Hz	2

Cable/Connecting plug:

No	0

Colour:

Grey, RAL 7035	A

Customization:

None	000

Options written in BLUE text are included in the Easy Range concept, which is our special service range for quick delivery from stock.
A type key made with ALL POSITIONS in BLUE qualifies a product for this service.

Item	Plug	Country	Order number	Comment
Straight cable 3,5 m	Schuko	DE	140306	
Straight cable 3,5 m	SEV	CH	140316	
Straight cable 3,5 m	UL	USA	140355	
Straight cable 3,5 m	Hospital grade	USA	140360	
Straight cable 3,5 m	British standard	UK	140350	
Coiled cable 1,2m /2,2 m	Schuko	DE	140342	
Coiled cable 1,2m /2,2 m	SEV	CH	140378	
Straight cable 3,5 m	SEV	CH	140422-3500	Polyurethane cable
Straight cable 3,5 m	Schuko	DE	140426-3500	Polyurethane cable
Tool for plugs (Jack /D-Sub/Mains)			140375	
Operating device adaptor (DSub9)			140420	

KOM2

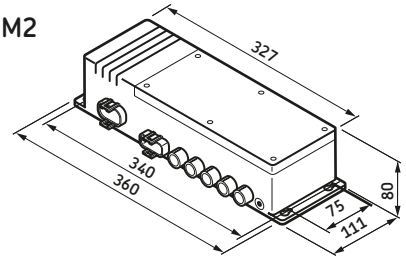

Type	Control	Max. motor connections	Input	Output
		n°	VAC	V/A
KOM 2	Encoder processing	5	230/120	24/6 or 12

KOM2 □-□□ 0A □-000

Type

Number of channels:

1 channel (not available with parallel option)	1
2 channels	2
3 channels	3
4 channels (not available with memory option)	4
5 channels (not available with memory option)	5

Battery option:

No battery	0
With battery and charge circuit (not possible with enhanced power)	1
With charge circuit for external battery	3

Voltage:

230 VAC, 50/60 Hz	1
120 VAC, 50/60 Hz	2
230 VAC, 50/60 Hz with enhanced power	4
120 VAC, 50/60 Hz with enhanced power	5

Cable/Connecting plug:

No cable	0

Colour:

Grey, RAL 7035	A

Software options:

Up and down function (up to 5 channels)	E
Parallel operation of actuators (all connected actuators move together), 2, 3, 4 channels	P
Parallel operation of 2 x 2 actuators	D
3 free programmable memory positions	M
Customer-specific programming	*K*

Customization:

None	000

Options written in italic fonts are not available as standard. Please contact SKF for verification.

Item	Plug	Country	Order number	Comment
Straight cable 3,5 m	Schuko	DE	140306	
Straight cable 3,5 m	SEV	CH	140316	
Straight cable 3,5 m	UL	USA	140355	
Straight cable 3,5 m	Hospital grade	USA	140360	
Straight cable 3,5 m	British standard	UK	140350	
Coiled cable 1,2 m/2,2 m	Schuko	DE	140342	
Coiled cable 1,2 m/2,2 m	SEV	CH	140378	
Straight cable 3,5 m	SEV	CH	140422-3500	Polyurethane cable
Straight cable 3,5 m	Schuko	DE	140426-3500	Polyurethane cable
Tool for plugs (Jack/D-Sub/Mains)			140375	
Operating device adaptor (DSub9)			140420	

KOM3

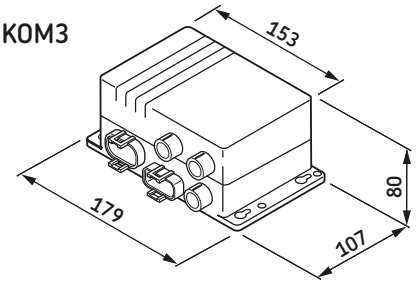

Type	Control	Max. motor connections	Input	Output
		n°	VAC	V/A
KOM 3	Basic functions	3	230/120	24/6
KOM 3T	Basic functions	2	230/120	24/9

K O M 3 ☐ - ☐ 0 A - 000

Type

Number of channels:
1 channel 1
2 channels 2
3 channels 3
2 channels (only for TLT-Telemag) T

Voltage:
230 VAC, 50/60 Hz 1
120 VAC, 50/60 Hz 2

Cable/Connecting plug:
No 0

Colour:
Grey RAL 7035 A

Customization:
None 000

Options written in BLUE text are included in the Easy Range concept, which is our special service range for quick delivery from stock.
A type key made with ALL POSITIONS in BLUE qualifies a product for this service.

Item	Plug	Country	Order number	Comment
Straight cable 3,5 m	Schuko	DE	140306	
Straight cable 3,5 m	SEV	CH	140316	
Straight cable 3,5 m	UL	USA	140355	
Straight cable 3,5 m	Hospital grade	USA	140360	
Straight cable 3,5 m	British standard	UK	140350	
Coiled cable 1,2 m/2,2 m	Schuko	DE	140342	
Coiled cable 1,2 m/2,2 m	SEV	CH	140378	
Straight cable 3,5 m	SEV	CH	140422-3500	Polyurethane cable
Straight cable 3,5 m	Schuko	DE	140426-3500	Polyurethane cable
Tool for plugs (Jack/D-Sub/Mains)			140375	
Operating device adaptor (DSub9)			140420	

KOM6

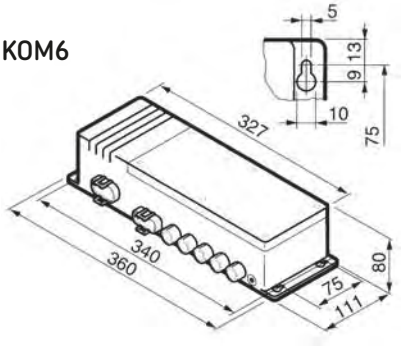

Type	Control	Max. motor connections	Input	Output
		n°	VAC	V/A
KOM 6	Encoder processing	4	230/120	24/6 or 12

KOM6 □-□□ 0A □-000

Type

Number of channels:
1 channel (not available with parallel option) 1
2 channels 2
3 channels 3
4 channels (not available with memory option) 4

Battery option:
No battery 0
With battery and charge circuit (not possible with enhanced power) 1
With charge circuit for external battery 3

Voltage:
230 VAC, 50/60 Hz 1
120 VAC, 50/60 Hz 2
230 VAC, 50/60 Hz with enhanced power 4
120 VAC, 50/60 Hz with enhanced power 5

Cable/Connecting plug:
Without cable 0

Colour:
Grey, RAL 7035 A

Software options:
Up and down function (up to 4 channels) E
Parallel operation of 2 x 2 actuators D
Parallel operation of actuators (all connected actuators move together), incl. 3 memory positions N
3 free programmable memory positions M
Customer-specific programming *K*

Customization:
None 000

Options written in italic fonts are not available as standard. Please contact SKF for verification.

Item	Plug	Country	Order number	Comment
Straight cable 3,5 m	Schuko	D	140306	
Straight cable 3,5 m	SEV	CH	140316	
Straight cable 3,5 m	UL	USA	140355	
Straight cable 3,5 m	Hospital grade	USA	140360	
Straight cable 3,5 m	British standard	UK	140350	
Coiled cable 1,2 m/2,2 m	Schuko	D	140342	
Coiled cable 1,2 m/2,2 m	SEV	CH	140378	
Straight cable 3,5 m	SEV	CH	140422-3500	Polyurethane cable
Straight cable 3,5 m	Schuko	D	140426-3500	Polyurethane cable
Tool for plugs (Jack /D-Sub/Mains)			140375	
Operating device adaptor (DSub9)			140420	

MCU

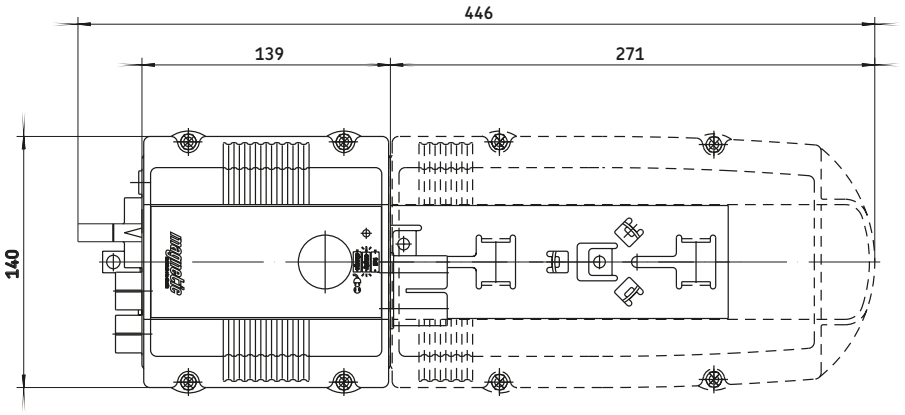

Type	Control	Max. motor connections	Input	Output
		n°	VDC	V/A
MCU	Basic functions	2	24	24/6

MCU 1 - 00 3 - 0000

Type

Voltage:
24 VDC: 1

Number of channels:
1 channel: 1
2 channels: 2

Cable/Connecting plug:
Without cable: 00

Colour:
Grey: 3

Options:
None: 000
Cut-off current 7,5 A: EWP
Cut-off current 9 A: EXP
Emergency lowering, channel 1: EYE
Cut-off current 7,5 A, electric emergency lowering, channel 1: 2DU
Cut-off current 9 A, electric emergency lowering, channel 1: 2AT

Symbols/customization:
Not used: 0000

Item	Data	Plug	Order number
Battery unit	4,5 Ah		ZBA-142211
Mains adapter	230 V	Euro plug	ZDV-142331
Mains adapter	120 V	UL plug	ZDV-142332
Wall charging station			ZLA-142221
Tool for plugs (Jack/D-Sub/Mains)			140375

LD

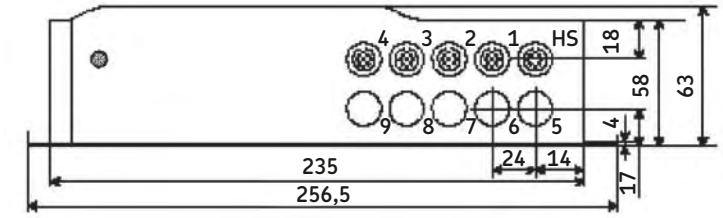

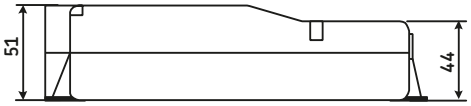

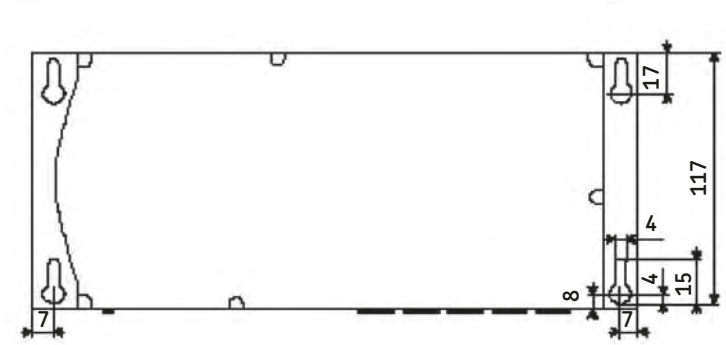

LD-014

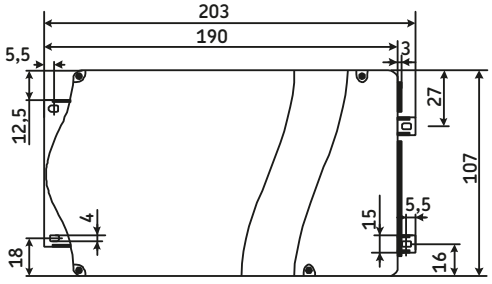

LD-015

Type	Control	Max. motor connections	Input	Output
		n°	VAC	V/A
LD-014	Encoder processing	4	230/120	24/12
LD-015	Encoder processing	2	230/120	24/10

L D - - -

Type

Number of channels:

2 channels for TELESMART TXG	015-005
2 channels for TMA/TMD	015-062
3 channels for TMA/TMD	014-041
4 channels for TMA/TMD	014-042

Voltage:

230 VAC	000
120 VAC	001

Options written in BLUE text are included in the Easy Range concept, which is our special service range for quick delivery from stock.
A type key made with ALL POSITIONS in BLUE qualifies a product for this service.

SEM

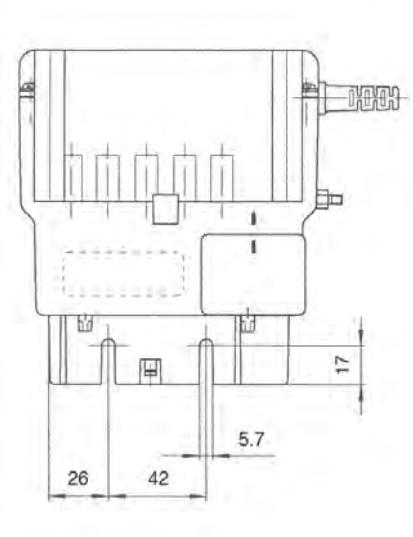

Type	Control	Max. motor connections	Input	Output
		n°	VAC	V/A
SEM	Basic functions	4	230/120	24/5

SEM 1 ☐ - ☐☐☐☐☐ - ☐

Type

Number of channels:
2 channels 2
4 channels 4

Voltage /frequency:
230 VAC/50 Hz 1
120 VAC/60 Hz 2

Mains plug:
Protection class II (2-pin mains plug)
Euro Standard 1
British Standard 2
UL 3
PUR cable Euro Standard 4
Protection class I (3-pin mains plug)
Schuko *B*
UL *E*

Colours:
Black *A*
Grey RAL 7035 B

Options, electrical:
None 0

Fastening:
Piggyback on Ecomag 0

Customer-specific adaptations:
None 000

Options written in italic fonts are not available as standard. Please contact SKF for verification.

CAEN

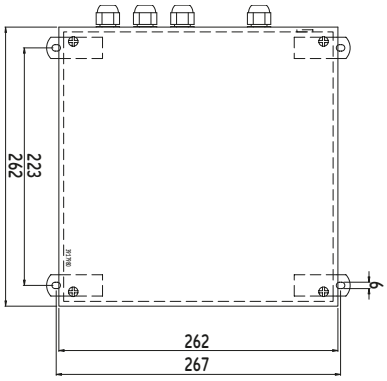

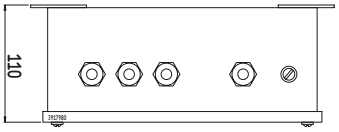

Type	Control	Max. motor connections	Input	Output
		n°	VAC	V/A
15	Basic functions (on/off)	1	230	24/10

Type code:
CAEN 15

CAEN

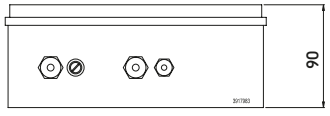

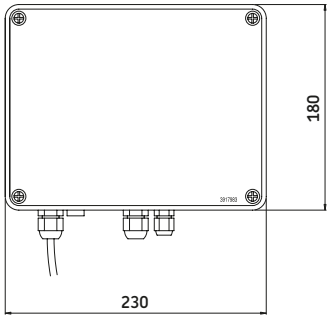

Type	Control	Max. motor connections	Input	Output
		n°	VAC	V/A
10R	Basic functions	1	230/120	24/1-10

Type code:
CAEN 10R

CAEV

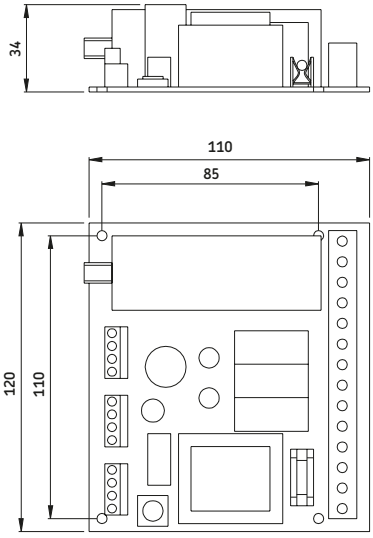

Suitable actuators:
CAR32, CAR40, CAT32-33 series with E110 or E220 motors.

Suitable hand switch:
CAES 31C

Technical data:

Supply voltage:	120 VAC or 230 VAC ±10 %
Frequency:	50 or 60 Hz
Fuse:	T2 A
Max. output power:	200VA (120 VAC), 400 VA (230 VAC)
Duty factor:	100 %
Power consumption:	<15 VA (stand-by mode)
Internal voltage:	24 VDC supplies limit switches/handset
Start capacitor:	6 µF/380 V for E220C motors, duty factor max. 30 %.

Type	Control	Max. motor connections	Input	Output
		n°	VAC	V/A
110/220	Basic functions	1	230/120	400/200

Available start capacitors: Values =3 µF / 4 µF / 6 µF / 8 µF or 12 µF

Benefits

- Reliable pc board for single phase AC motors
- Can be used with both 120 VAC or 230 VAC
- Low voltage signal through cable handset
- Built-in option for limit switches
- Built-in option for thermal protection
- Easy installation via front screw terminals
- Compact design

Type code:

CAEV 110/220

CAED ANR

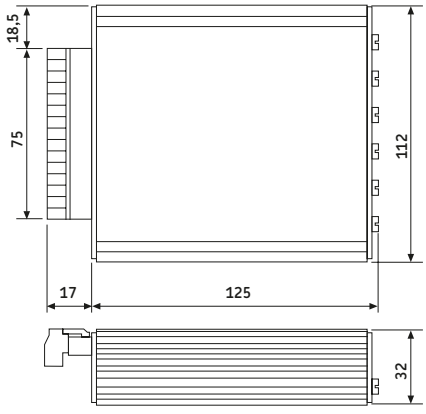

Selection
Control unit suitable for CAP43A and CAP43B servo actuators.
Select cut out level according to respective actuators.
Performance diagram i.e. the current drawing at desired load limit.

Technical data

Supply voltage:	Nom. 24 VDC (22-28 VDC)
Fuse:	Max. 10 A (slow)
Input:	See ordering key
Impedance:	>100 kW
Position accuracy:	3 % typically
Repeatability:	0,5 % typically
Aluminium profile housing:	IP40
Operating temperature:	0 to +50 °C

Type	Control	Max. motor connections	Input	Output
		n°	VDC	V/A
5-24R-PO	Encoder processing	1	22-28	24/5
9-24R-PO	Encoder processing	1	22-28	24/9

Benefits

- Compact potentiometer control unit
- Supply voltage 24 VDC
- Electronic overload protection, factory pre-set at 5 or 9 A
- LED indication for overload cut out
- Easy installation, all connections made at front screw terminal

Type code:

CAED ANR 5-24R-PO
CAED ANR 9-24R-PO

CAED

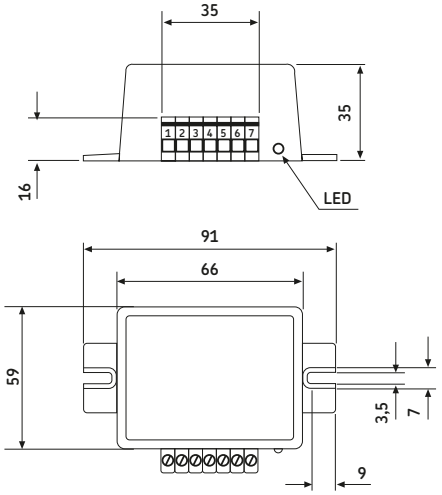

Benefits

- Compact ON/OFF control unit
- Supply voltage 24 VDC
- Output voltage 24 VDC
- Electronic overload protection, factory pre-set at 3 A, 5 A or 9 A
- LED indication for overload cut out
- Easy installation, all connections made at front screw terminal

Selection
Fits SKF 24 VDC-actuators with a current draw below 9 A. Select cut out level according to respective actuators performance diagram i.e. the current draw at desired load limit.

Technical data

Current draw at rest:	<3 mA
Protection class:	IP31
Temp. range:	0 to +50 °C
Supply voltage:	24 VDC
Output voltage:	24 VDC
EMC compliance:	EN 50 081-1 EN 50 082-1 EN 60 601-1-2

Type	Control	Max. motor connections	Input	Output
		n°	VDC	V/A
3-24R	Basic functions	1	24	24/3
5-24R	Basic functions	1	24	24/5
9-24R	Basic functions	1	24	24/9

Type code:
CAED 3-24R
CAED 5-24R
CAED 9-24R

CAEP

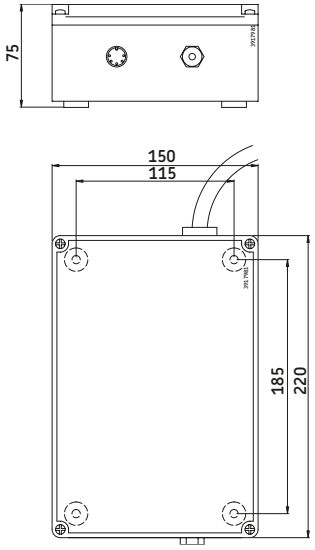

Type	Control	Max. motor connections	Input	Output
		n°	VAC	V/A
10P-SL	Basic functions	1	230	24/2-10
8V*	Basic functions	1	230	24/10

*Dimension of housing: 260 x 260 x 107 mm

Type code:
CAEP 10P-SL
CAEP 8V

CAEL

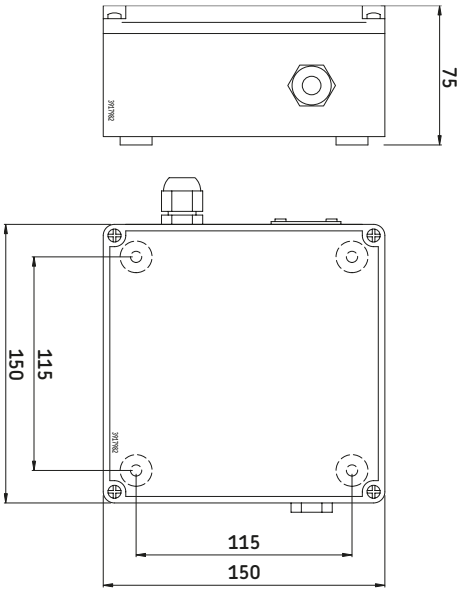

Type	Control	Max. motor connections	Input	Output
		n°	VAC	V/A
10-24R	Basic functions	1	230	24/2-10

Type code:
CAEL 10-24R

BCU

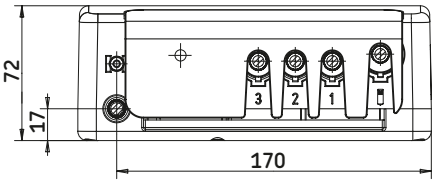

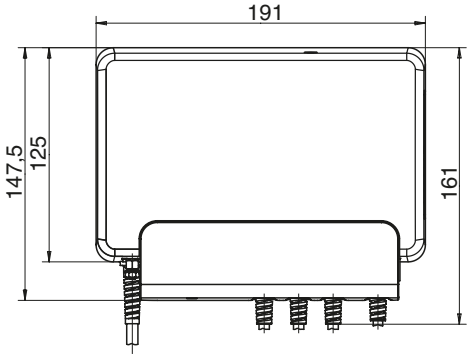

Type	Control	Max. motor connections	Input	Output
		n°	VAC	V/A
BCU 43	Basic functions	3	120	24/7
BCU 53	Basic functions	3	120	24/7
BCU 83	Basic functions	3	230	24/7
BCU 93	Basic functions	3	230	24/7

Type code:
BCU 43
BCU 53
BCU 83
BCU 93

BCU



Type

Voltage:

120 VAC 50/60 Hz (Class II)	*4*
120 VAC 50/60 Hz (Class I)	5
230 VAC 50 Hz (Class II)	8
230 VAC 50Hz (Class I)	*9*

Number of channels:

3 channels	3

Mains power supply cable:

Straight, 3,5 m, 2-pole plug, EU (for voltage type 8)	2J
Straight, 3,5 m, 2-pole plug, UK (for voltage type 8)	2H
Straight, 3,5 m, 2-pole plug, UL (for voltage type 4)	*2M*
Straight, 3,5 m, 3-pole plug, SEV (for voltage type 9)	*2C*
Straight, 3,5 m, 3-pole plug, Schuko (for voltage type 9)	*2E*
Straight, 3,5 m, 3-pole plug, UK (for voltage type 9)	*2G*
Straight, 3,5 m, 3-pole plug, Hospital grade (for voltage type 5)	*2N*
Straight, 3,5 m, 3-pole plug, UL (for voltage type 5)	2L

Colour/Design:

Grey, RAL 7035	3

Option 1:

DIN 8 motor plug and HD15 operating device plug	1

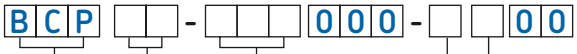

BCU parameterization

Functionality:

All channels individual	11
Channel 2+1	*12*
Channel 1+2	21
All channels simultaneously	30
Trendelenburg	T1

Motors:

A CALA36A, ECO30, ECO50	3,7 A	Actuator 1	-
C CARE33A, TLT10, TXG10 (EXG)	4,7 A	Actuator 2	-
E TFG, ECO70, ECO90, CAT33, CAT32B	5,7 A	Actuator 3	-
M MAX, TLG, THG	6,7 A		
R R20, R21, R22	8,5 A		
	Extend	*Retract*	
S CAFS exept screw "L" and motor "A"	*4,7 A*	*2,0 A*	
L CAFS with screw "L" and motor "A	*6,7 A*	*2,0 A*	

Soft start/stop:

Hard, start 0 ms, stop 0 ms	0
Medium, start 400 ms, stop 200 ms	3
Soft, start 1 000 ms, stop 500 ms	6

Options:

None	0
Single fault detection if operating unit is disabled	*1*

Options written in BLUE text are included in the Easy Range concept, which is our special service range for quick delivery from stock.
A type key made with ALL POSITIONS in BLUE qualifies a product for this service.
Options written in italic fonts are not available as standard. Please contact SKF for verification.

SCU



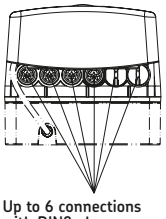

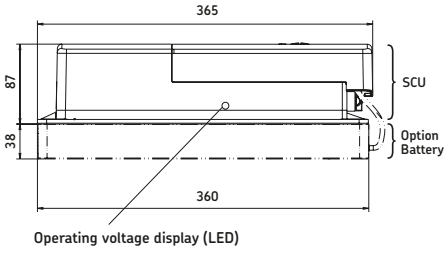

View without protection cover

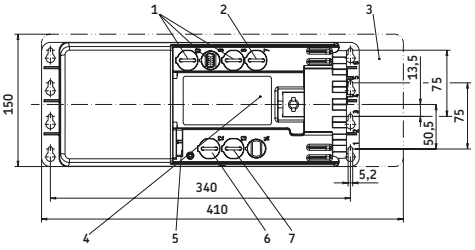

Connection diagram for optional external limit switches

Single fault safe wiring requires diodes in series to the switches. NC contacts have to be used to stop a movement; NO contacts are used to start movements. Switch connection data: 50 VDC min., 100 mA min. (eff. switching current approx. 10 mA)

1. Two connections for HD15 operating devices
2. HD15 limit switch connection
3. Additional space for mounting
4. Data plate software
5. Mains connection
6 Communication interface (optional)
7. D-Sub9 battery connection (optional)

Pinning of HD15 limit switch

Function	Pin	Wire colour (ZKA-160627-2500)
Switch 1	2	brown/green
Switch 2	4	red/blue
Switch 3	6	violet
Switch 4	8	rot
24 VDC (com)	1, 3 5, 7, 9	white/yellow, white/green, grey/pink, black, blue
NC	10, 11, 12, 14	pink, grey, yellow, brown
20-40 VDC, max. 50 mA	13	green
GND	15	white

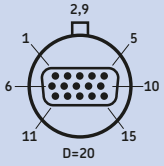

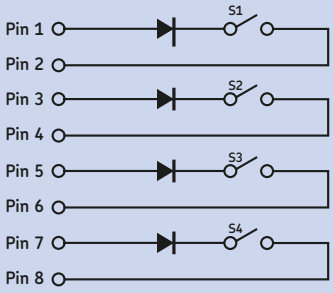

Type	Control	Max. motor connections	Input	Output
		n°	V AC/DC	V/A
SCU1	Encoder processing	6	22-40 DC	24/30
SCU4	Encoder processing	6	120 AC	24/18
SCU5	Encoder processing	6	120 AC	24/18
SCU8	Encoder processing	6	230 AC	24/18
SCU9	Encoder processing	6	230 AC	24/18

SCU

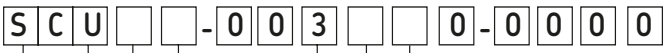

Type

SCU control unit

Voltage

24 VDC (only for 6 channel version)	1
120 VAC, 60 Hz, class II	*4*
120 VAC, 60 Hz, class I	5
230 VAC, 50 Hz, class II	8
230 VAC, 50 Hz, class I	*9*

Number of channels

3 channels	3
6 channels	6

Colour/Design

Grey (Ral7035)	3

Battery

None (only for SCU16)	1
Prepared for adoption of battery	2
Battery (2,7 Ah) connected on the underside of the unit	3

Tranformer

None (DC version)	0
Standard (AC version)	3



Type

SCU parameterization

Functionality

All channels individually	11
Channel 2+1(+1+1+1)	*21*
Six (6) channel version 2+2+1+1	22
Three (3) channel version, all channels synchronously	30
Six (6) channel version 3+1+1+1	31
Six (6) channel version 4+1+1	41
Six (6) channel version 5+1	51
Six (6) channel version, all channels synchronously	60
Trendelenburg T+1 (+1+1)	*T1*

Actuators

			Actuator 1 –
C	TLT 10	4,7 A	Actuator 2 –
E	TFG10, CAJA60	5,7 A	Actuator 3 –
M	MAX, TLG, THG	6,7 A	Actuator 4 –*
R	R20, R21, R22, MD22, MD23	8,5 A	Actuator 5 –*
U	R23, R24, R25	11,7 A	Actuator 6 –*

*for SCUx3: insert zero

Softstart

Hard, start 0 pulses, stop 0 pulses	0
Medium, start 12 pulses, stop 6 pulses	3
Soft, start 24 pulses, stop 12 pulses	6

Options

None	0
Single fault detection if operating device is disabled	*1*

The SCU solution offers many more possibilities than those given in the type keys. Please, feel free to ask for more functions like "virtual limit switches", "external limit switches" and so on.

Options written in italic fonts are not available as standard. Please contact SKF for verification.

VCU



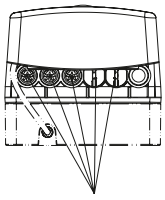

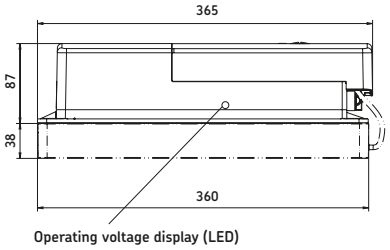

View without protection cover

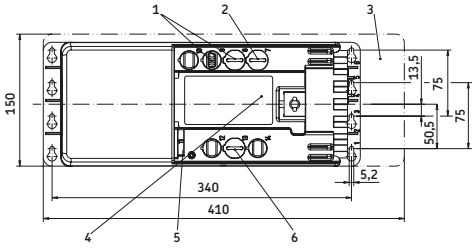

1. Two connections for HD15 operating devices
2. HD15 limit switch connection
3. Additional space for mounting
4. Data plate software
5. Mains connection
6. D-Sub9 battery connection (optional)

Connection diagram for optional external limit switches

Single fault safe wiring requires diodes in series to the switches. NC contacts have to be used to stop a movement; NO contacts are used to start movements. Switch connection data: 50 VDC min., 100 mA min. (eff. switching current approx. 10 mA)

Pinning of HD15 limit switch

Funktion	Pin	Wire colour (ZKA-160627-2500)
24 VDC (com)	1	white-yellow
Switch 1	2	brown-green
24 VDC (com)	3	white-green
Switch 2	4	red-blue
24 VDC (com)	5, 7, 9	grey-pink, black, blue
NC	6, 8, 10, 11, 12, 14	violet, red, pink grey, yellow, brown
20-40 VDC, max. 50 mA	13	green
GND	15	white

Connection diagram

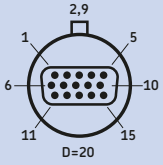

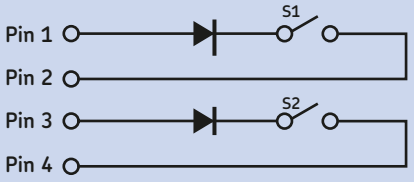

Type	Control	Max. motor connections	Input	Output
		n°	V AC/DC	V/A
VCU 1	Encoder processing	5	24 DC	24/30
VCU 4	Encoder processing	5	120 AC	24/7
VCU 5	Encoder processing	5	120 AC	24/18
VCU 8	Encoder processing	5	230 AC	24/7
VCU 9	Encoder processing	5	230 AC	24/18

VCU

VCU □□-003□□0-000

Type

VCU control unit

Voltage

24 VDC (only wih 5 channels)	1
120 VAC, 50/60 Hz, class II	*4*
120 VAC, 50/60 Hz, class I	5
230 VAC, 50 Hz, class II	8
230 VAC, 50 Hz, class I	*9*

Number of channels

3 channels	3
5 channels	5

Colour/Design

Grey (Ral7035)	3

Options 1

No options (only VCUx3 or VCU15)	1
Prepared for adoption of battery	2
Battery (2,7 Ah) connected on the underside of the unit	3

Tranformer

None (only 24 V version)	0
Transformer (for VCU4 and VCU8)	1
Transformer (for VCU5 and VCU9)	3

VCP□□-□□□□□0-□□00

Type

VCU parameterization

Functionality

All cannels individually	11
2 channels simultaneously + 1 or 3 individually	21
2 + 2 channels simultaneously + 1 individually	22
All channels simultaneously, only 3 channel version	30
3 channels simultaneously + 2 individually, only 5 channel version	*31*
4 channels simultaneously + 1 individually, only 5 channel version	41
All channels simultaneously, only 5 channel version	51
Trendelenburg (2 channels) + 1 or 3 individually	T1

Code for used actuators

A CALA36A, ECO30, ECO50	3,7 A	Actuator1	-
C CARE33, TLT01, TXG10 (EXG)	4,7 A	Actuator2	-
E TFG, ECO70, ECO90, CAT33, CAT32B	5,7 A	Actuator3	-
M MAX, TLG, THG	6,7 A	Actuator4	-*
R R20, R21, R22	8,5 A	Actuator5	-*
U R23, R24, R25	11,7 A		

	up	down
S CAFS except screw "L" and motor "A"	*4,7 A*	*2,0 A*
L CAFS with screw "L" and motor "A"	*6,7 A*	*2,0 A*

*For VCUx3: Insert Zero

Softstart

Hard= start 0 ms, stop 0 ms	0
Medium= start 400 ms, stop 200 ms	3
Soft= start 1 000 ms, stop 500 ms	6

Options

No options	0
Single fault detection if operation device is disabled	*1*

Options written in italic fonts are not available as standard. Please contact SKF for verification.

Control box CB200

Features / Benefits

- Compact design
- Can be fitted on FD actuators
- CB200S with integrated overload protection
- CB200E with ELP (Electronic Limit switch Protection) to extend service life of the switch
- CB200A with anti-pinching function
- CB200P (two actuators in parallel)
- Duty cycle 10 %



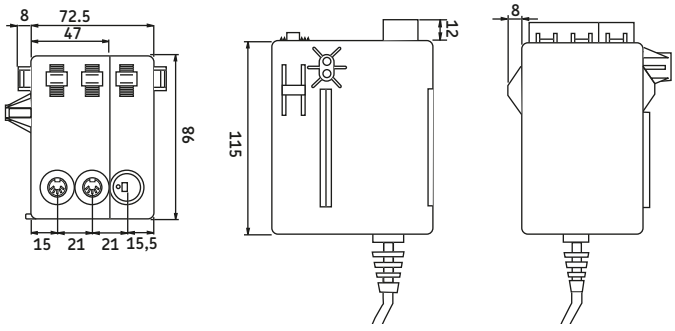

Type	Control	Max. motor connections	Input	Output	Protection class	Features
		n°	VAC	VDC/A	IP	
CB200S	Basic functions	3	110/120/230	24/3	51	Standard
CB200E	Basic functions	2	110/120/230	24/3	51	ELP protection
CB200A	Encoder processing	2	110/120/230	24/3	51	Anti-pinching
CB200P	Encoder processing	2	110/120/230	24/3	51	Parallel

Control box suitable for:

Actuator type/series: M, IMD3, FD, LD, MD (CB200S/E/A)
M, FD, MD (CB200P)

Hand sets: HS-112, HS-124, HS-135, HS-138 (CB200S)
HS-112, HS-124 (CB200E/A)
HS-534, HS-425 (CB200P)

CB 200 - □ - □ - □□□

Model

Type
Standard version — S
Encoder processing version with anti-pinching function — A

Number of actuators
1 — 1
2 — 2
3 (only for control box type "S") — 3

Voltage (VAC)
100 — 100
110-115 — 120
230 — 230
240 — 240

Control box CB300

Features / Benefits

- Control box with separate external power supply box which can be wall mounted or placed on the floor next to the mains. Only low voltage connection from the power supply to control box ensures safety and low EMI/EMC operation
- Control box can be fitted on FD series actuator
- Integrated overload protection
- Integrated ELP (Electronic Limit switch Protection) to extend service life of the switch
- CB300S can control up to 3 actuators individually
- CB300A with anti-pinching function
- Duty cycle 10 %



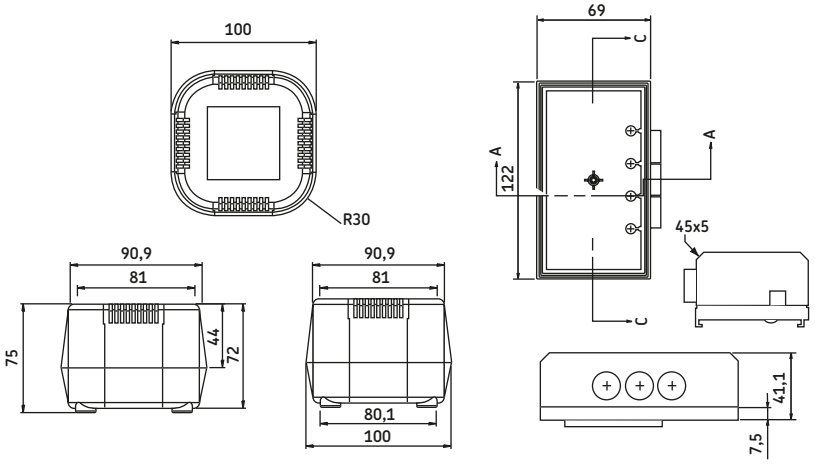

Type	Control	Max. motor connections	Input	Output	Protection class	Features
		n°	VAC	VDC/A	IP	
CB300S	Basic functions	3	110/120/230	24/3	51	Standard
CB300E	Basic functions	2	110/120/230	24/3	51	ELP protection
CB300A	Encoder processing	2	110/120/230	24/3	51	Anti-pinching

Control box suitable for:

Actuator type/series: M, IMD3, FD, LD, MD
Hand sets: HS-112, HS-124

CB300 - □ - □ - □□□

Model

Type

Standard version	S
Encoder processing version with anti-pinching function + 1 safety strip	A

Number of actuators

1	1
2	2

Voltage (VAC)

100	100
110-115	120
230	230
240	240

Control box CB800



Features

- Controls up to 4 actuators individually
- With locking mechanism for DIN and mains socket
- Integrated overload protection
- Can be connected with external DC power/battery for emergency use
- Optional back-up battery for emergency use (CB800B only)
- Duty cycle 10 %
- EN 60601

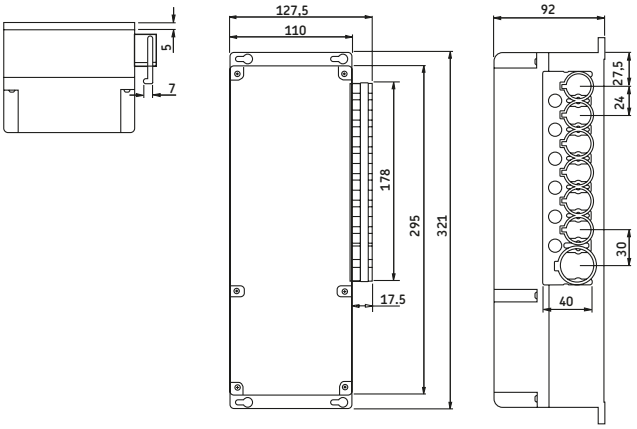

Type	Control	Max. motor connections	Input	Output	Protection class	Features
		n°	VAC	VDC/A	IP	
CB800S	Basic functions	4	110/120/230	24/6	51/65	Standard
CB800B	Basic functions	4	110/120/230	24/6	51/65	Battery
CB800E	Basic functions	4	110/120/230	24/6	51/65	External DC input

Control box suitable for:

Actuator type/series:	M, IMD3, FD, MD
Hand sets:	HS-136C, HS-138C, HS-14T

CB800 - □ - □ - □ - □□□ □

Model

Type
- Standard version — S
- Standard version with back-up battery — B
- Standard version with external DC power input (only with 1 handset) — E

Number of actuators
- 1 — 1
- 2 — 2
- 3 — 3
- 4 — 4

Number of hand sets
- 1 — 1
- 2 (not available for type "E") — 2

Voltage (VAC)
- 100 — 100
- 110-115 — 120
- 230 — 230
- 240 — 240

Option
- Protection class, IP65 — 65

Notes

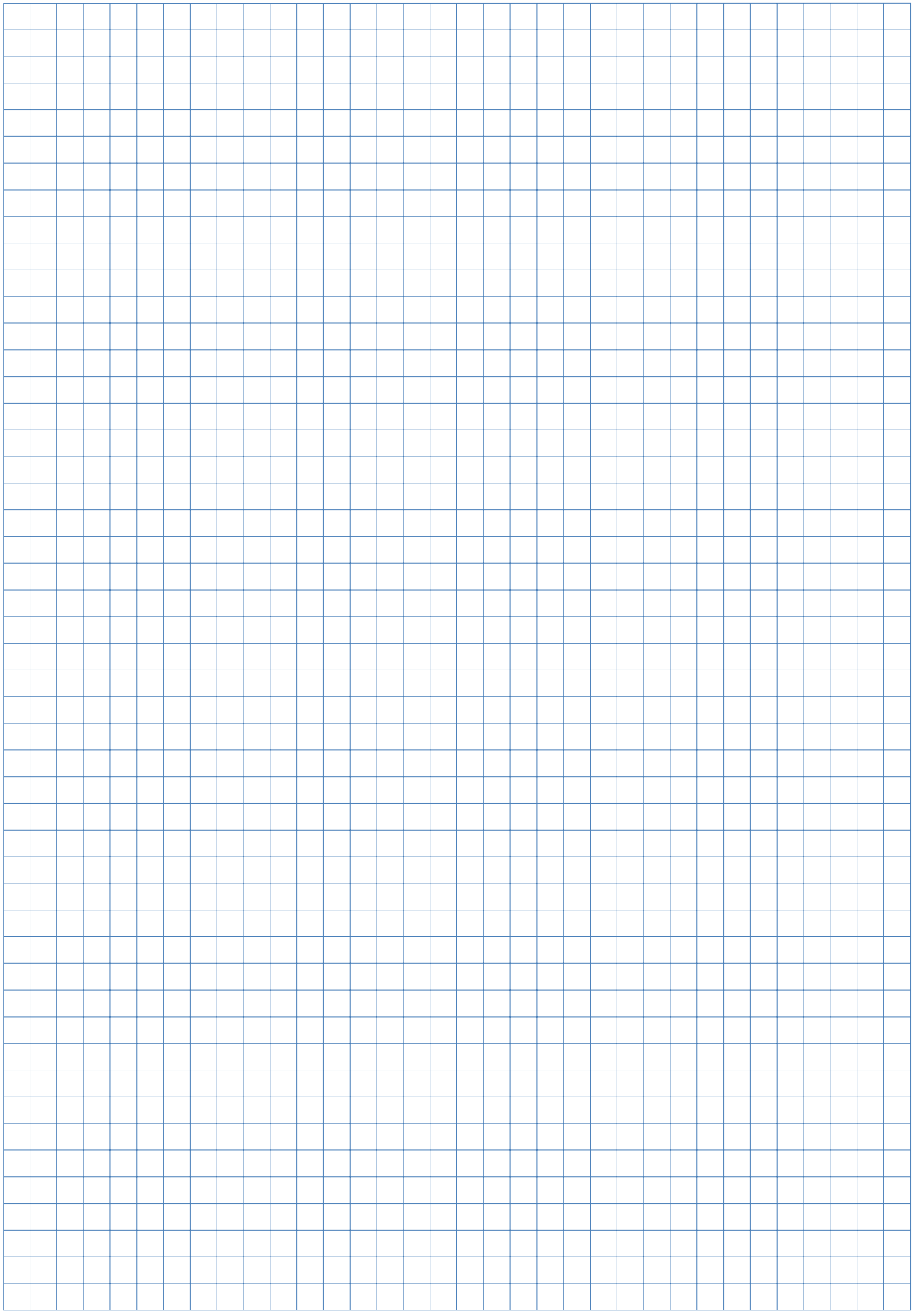

Notes

Hand switches



The hand switches serve for operating one or several actuators. With the pushbutton field on the front panel the movements of the actuators can be controlled easily and precisely. The hand switches are available with different plug options. There is also an infrared version for more flexibility in remote operating.

Benefits

- Easy and precise
- Flexible and remote operation
- Ergonomic design
- Different plug options

Hand switches	Type	Operating power	Max. operating motors	Prot. class	Colour
		VDC/mA	n°	IP	
EHA	EHA 1	12/50	4	67	Grey
	EHA 2	12/50	5	67	Grey
	EHA 3	12/50	4	67	Grey
IHA1	IHA1	–	5	67	Black
EHE	EHE 1/3	38/50	4	X7	Grey /black
	EHE 6	38/50	5	X7	Grey
PHC	PHC	–	4	66	Grey
CAES	31B	30/33	1	54	Black
	31C	30/33	1	54	Black
	31D	30/33	1	54	Black
	32D	30/33	2	54	Black
HS	112	40/50	1	51	Black
	124	40/50	2	51	Black
	126	40/50	2	51	Black
	138	40/50	3	51	Black
	148	40/50	4	51	Black

EHA1

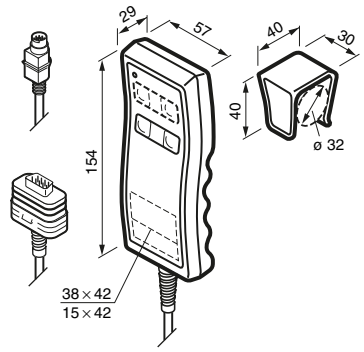

Type	Operating power	Max. operating motors	Prot. class	Colour
	VDC/mA	n°	IP	
EHA 1	12/50	4	67	grey

EHA1 □ - □ 1 □ □ □ - 0 0 0

Type

Number of channels:

1 channel	1
2 channels	2
3 channels	3
4 channels	4

Hook:

No	0
Yes mounted with hook	1
Hook supplied separately	2

Colour:

Grey RAL 7035	1

Cable/Connecting plug:

Straight, 2,5 m, D-sub 9-pin plug	A
Coiled, 1,3 m/2,3 m, D-sub 9-pin plug	B
Straight 2,5 m (mini DIN 6-pin plug)	C
Coiled 1,0 m / 2,0 m (only possible up to 3-channel)	D
Coiled 1,8 m / 2,8 m, D-sub 9-pin plug	E
Coiled 2,5 m / 3,5 m, D-sub 9-pin plug	F

Symbols:

None		00
1 channel:	Arrow up/down	10
	Head	11
	Foot	12
	Level	13
2 channels:	Arrow up/down	20
	Head/level	21
	Head/foot	22
	Level/head	23
3 channels:	Arrow up/down	30
	Head/level/foot	31
	Foot/level/head	32
4 channels:	Arrow up/down	40
	Head/level/foot/knee lever	41
	Level/head/foot/autocontour	42

Customer logo:

Yes (position as shown on drawing, template is required)	J
No	N

Options written in BLUE text are included in the Easy Range concept, which is our special service range for quick delivery from stock.
A type key made with ALL POSITIONS in BLUE qualifies a product for this service.
Options written in italic fonts are not available as standard. Please contact SKF for verification.

Item	Order number
Hook with sticker	145361-0001

EHA2

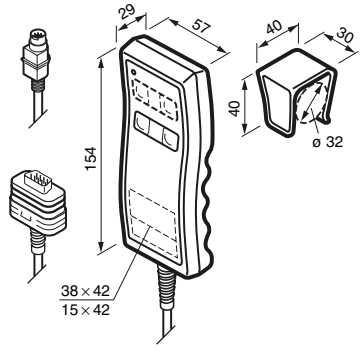

Type	Operating power	Max. operating motors	Prot. class	Colour
	VDC/mA	n°	IP	
EHA 2	12/50	5	67	grey

EHA2 ☐ - ☐ 1 ☐ ☐ ☐ - 0 0 0

Type

Number of channels:

1 channel	1
2 channels	2
3 channels	3
4 channels	4
5 channels	5
1 channel with 3 memory functions	A
2 channels with 3 memory functions	B
3 channels with 3 memory functions	C

Hook:

No	0
Yes mounted with hook	1
Hook supplied separately	2

Colour:

Grey, RAL 7035	1

Cable/Connecting plug:

Straight, 2,5 m, D-sub 9-pin plug	A
Coiled, 1,3 / 2,3 m, D-sub 9-pin plug	B
Coiled, 1,8 / 2,8 m, D-sub 9-pin plug	E
Coiled, 2,5 / 3,5 m, D-sub 9-pin plug	F

Symbols:

None		00
1 channel:	Arrow up/down	10
	Head	11
	Foot	12
	Level	13
2 channels:	Arrow up/down	20
	Head/level	21
	Head/foot	22
	Level/head	23
3 channels:	Arrow up/down	30
	Head/level/foot	31
	Foot/level/head	32
4 channels:	Arrow up/down	40
	Head/level/foot/knee lever	41
	Level/head/foot/autocontour	42
5 channels:	Arrow up/down	50

Customer logo:

Yes (position as shown on drawing, template is required)	J
No	N

Item	Order number
Hook with sticker	145361-0001

EHA3

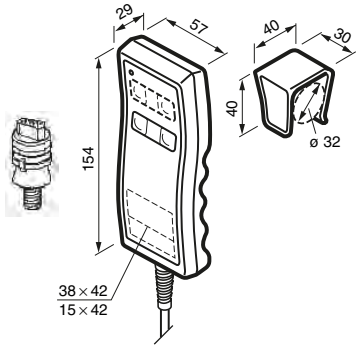

Type	Operating power	Max. operating motors	Prot. class	Colour
	VDC/mA	n°	IP	
EHA 3	12/50	4	67	grey

EHA3 □ - □□□□□□ - 000

Type

Number of channels:

1 channel	1
2 channels	2
3 channels	3
4 channels	4
5 channels	5

Hook:

Hook mounted	1
Hook delivered separately	2

Colour of housing:

Grey RAL 7035	3

Plug/Cable:

Straight cable 2,5 m, High Density D-Sub 15 p	*L*
Coiled cable 1,3 m / 2,3 m, High Density D-Sub 15p	M

Symbols:

None		00
1 channel: 2nd row from top	Arrow up/down	10
	Head	11
	Foot	12
	Level	13
	Anti-Trendelenburg	14
2 channels: 1st row from top	Arrow up/down	20
	Head/foot	21
	Head/level	22
	Level/head	23
	Level/Anti-Trendelenburg	29
3 channels: 1st-3rd row from top	Arrow up/down	30
	Head/foot/level	31
	Level/head/foot	32
	Level/Anti-Trendelenburg/Head	39
4 channels: 1st-4th row from top	Arrow up/down	40
	Level/Anti-Trendelenburg/Head/Foot	47
5 channels: 1st-5th row from top	Arrow up/down	50

Customer logo:

Yes (position as shown on drawing, template is required)	*J*
No	N

Customer-specific adaptions:

None	000

Options written in BLUE text are included in the Easy Range concept, which is our special service range for quick delivery from stock.
A type key made with ALL POSITIONS in BLUE qualifies a product for this service.
Options written in italic fonts are not available as standard. Please contact SKF for verification.

Item	Order number
Hook with sticker	145361-0001

IHA1

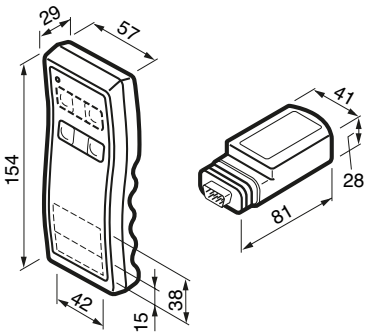

Type	Max. operating motors	Prot. class	Colour
	n°	IP	
IHA 1	5	67	black

Infrared receiver

ZDV-140210-1014, Code 1, for KOM1 and KOM3
ZDV-140210-1024, Code 2, for KOM1 and KOM3
ZDV-140210-2010, Code 1, for KOM2
ZDV-140210-2011, Code 1, for KOM2 (1 channel hand switch)
ZDV-140210-2020, Code 2, for KOM2
ZDV-140210-2021, Code 2, for KOM2 (1 channel hand switch)

IHA1 □ - □0□□ - 000

Type

Number of channels:

1 channel	1
2 channels	2
3 channels	3
4 channels	4
5 channels	5
1 channel with 3 memory functions	A
2 channels with 3 memory functions	B
3 channels with 3 memory functions	C

Codes:

Code 1	1
Code 2	2

Colour of housing:

Black	0

Symbols:

None		00
1 channel:	Arrow up/down	10
	Head	11
	Foot	12
	Level	13
2 channels:	Arrow up/down	20
	Head/foot	21
	Head/level	22
	Level/head	23
3 channels:	Arrow up/down	30
	Head/foot/level	31
	Level/head/foot	32
4 channels:	Arrow up/down	40
	Head/foot/level/knee lever	41
	Level/head/foot/autocontour	42
5 channels:	Arrow up/down	50

Customer logo:

Yes (position as shown on drawing, template is required)	J
No	N

Customer-specific adaptions:

None	000

Item	Order number
Hook with sticker	145361-0001

EHE 1

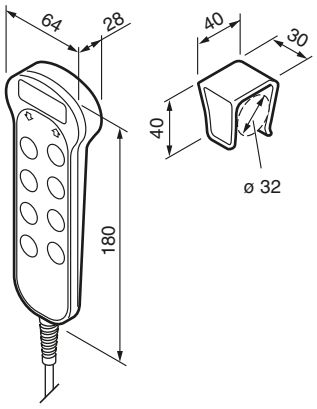

Type	Operating power	Max. operating motors	Prot. class	Colour
	VDC/mA	n°	IP	
EHE 1	38/50	4	X7	grey/black

EHE1 - 1 - 000

Type
EHE, standard — EHE1

Number of channels:
1 channel — 1
2 channels — 2
3 channels — 3
4 channels — 4

System of protection:
IPX7 — 1

Colour:
Black — *A*
Grey RAL 7035 — B

Hook:
No — *0*
Yes — 1

Symbols:
1 channel: Arrow up/down — 10
Head — *11*
2 channels: Arrow up/down — 20
Head/level — 21
Head/foot — *22*
3 channels: Arrow up/down — 30
Head/level/foot — 31
Level/head/foot — *33*
4 channels: Arrow up/down — 40
Head/level/foot/knee lever — *41*

Customer logo:
Yes (position as shown on drawing, template is required) — *A*
No — B

Options written in italic fonts are not available as standard. Please contact SKF for verification.

Item	Colour	Order number
Hook with sticker	grey	145361-0001
Hook with sticker	black	145361-0003

EHE 6

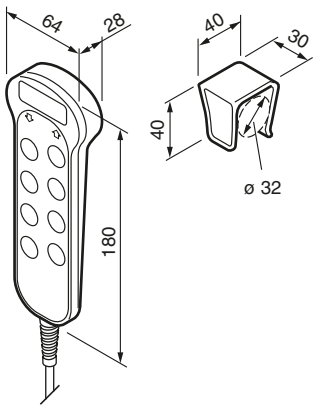

Type	Operating power	Max. operating motors	Prot. class	Colour
	VDC/mA	n°	IP	
EHE 6	38/50	5	X7	grey

EHE6 ☐ - 1 ☐ ☐ ☐ ☐ - 000

Type

Number of channels:

1 channel	1
2 channels	2
3 channels	3
4 channels	4
5 channels	5
1 channel with 3 memory functions	A
2 channels with 3 memory functions	B
3 channels with 3 memory functions	C

System of protection:

IPX7	1

Colour:

Black	A
Grey RAL 7035	B

Hook:

No	0
Yes	1

Symbols:

1 channel:	Arrow up/down	10
	Head	11
	Foot	12
	Level	13
2 channels:	Arrow up/down	20
	Head/level	21
	Head/foot	22
	Level/head	23
3 channels:	Arrow up/down	30
	Head/level/foot	31
	Foot/level/head	32
	Level/head/foot	33
4 channels:	Arrow up/down	40
	Head/level/foot/knee lever	41
	Level/head/foot/autocontour	42
5 channels:	Arrow up/down	50

Customer logo:

Yes (position as shown on drawing, template is required)	A
No	B

Item	Colour	Order number
Hook with sticker	grey	145361-0001
Hook with sticker	black	145361-0003

PHC

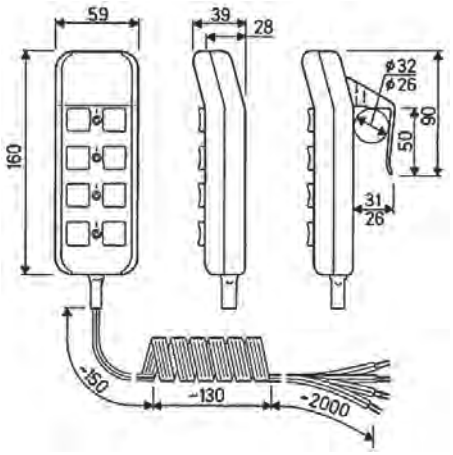

Type	Operating power	Max. operating motors	Prot. class	Colour
	VDC/mA	n°	IP	
PHC	-	4	66	grey

Type code: (for actuators with pneumatic receiver only)
PHC 1 - 130517 (1 channel)
PHC 2 - 130625 (2 channels)
PHC 3 - 130756 (3 channels)
PHC 4 - 130955 (4 channels)

CAES

CAES31B

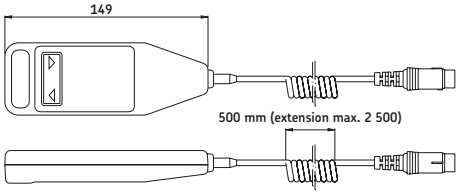

CAES31C

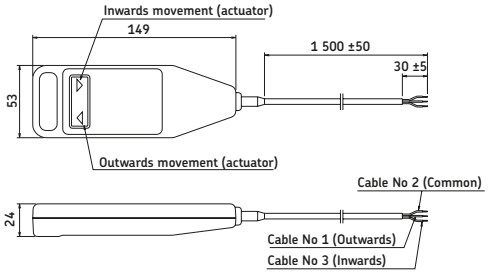

Technical data:

Pressure force on keys:	3,5N
Max. current:	200 mA
Max. voltage:	30 VDC
Housing material	PA6
Colour:	Black

Type	Operating power	Max. operating motors	Prot. class	Colour
	VDC/mA	n°	IP	
31B	30/33	1	54**	black
31C	30/33	1	54**	black
31D*	30/33	1	54**	black
32D*	30/33	2	54**	black

*Elbowed DIN plug.
**According to IP class 54.

Connecting diagram:

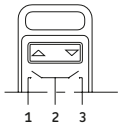

Type code:
CAES 31B (DIN 5-pole plug, 2 buttons)
CAES 31D (DIN 5-pole plug, 2 buttons, for CAFC and CAFM controls only)
CAES 32D (DIN 5-pole plug, 4 buttons, for CAFC and CAFM controls only)
CAES 31C (No connector, 2 buttons)

Benefits

- Robust ergonomic design
- Membrane keyboard
- Clearly marked keys
- Fastening hook (option)
- Customized logo print (option)
- Protection class, IP55

HS 112

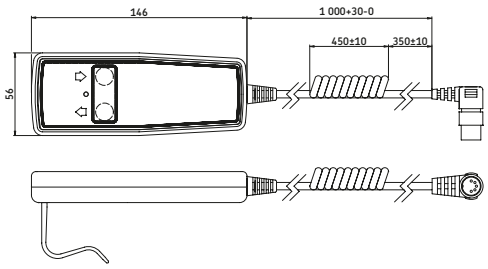



HS 124

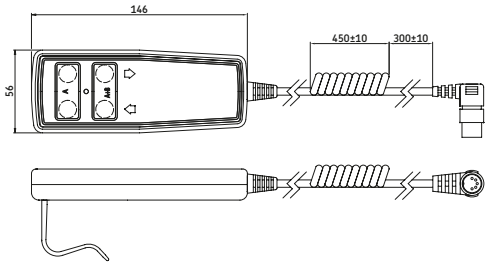



HS 126

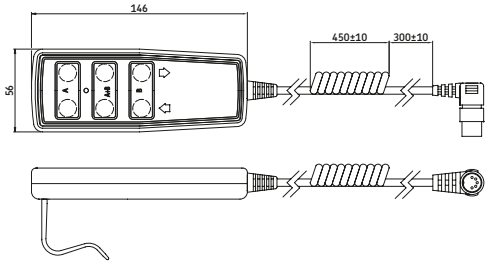



HS 138

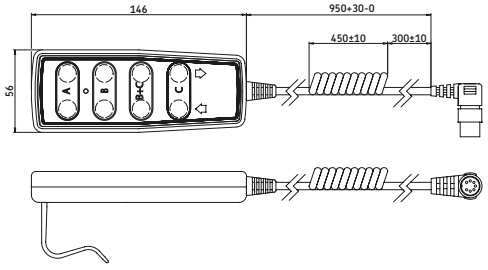



HS 148

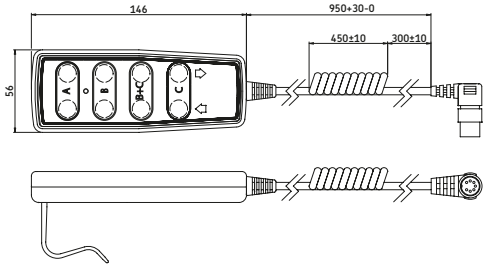



Notes

Notes

Notes

Notes

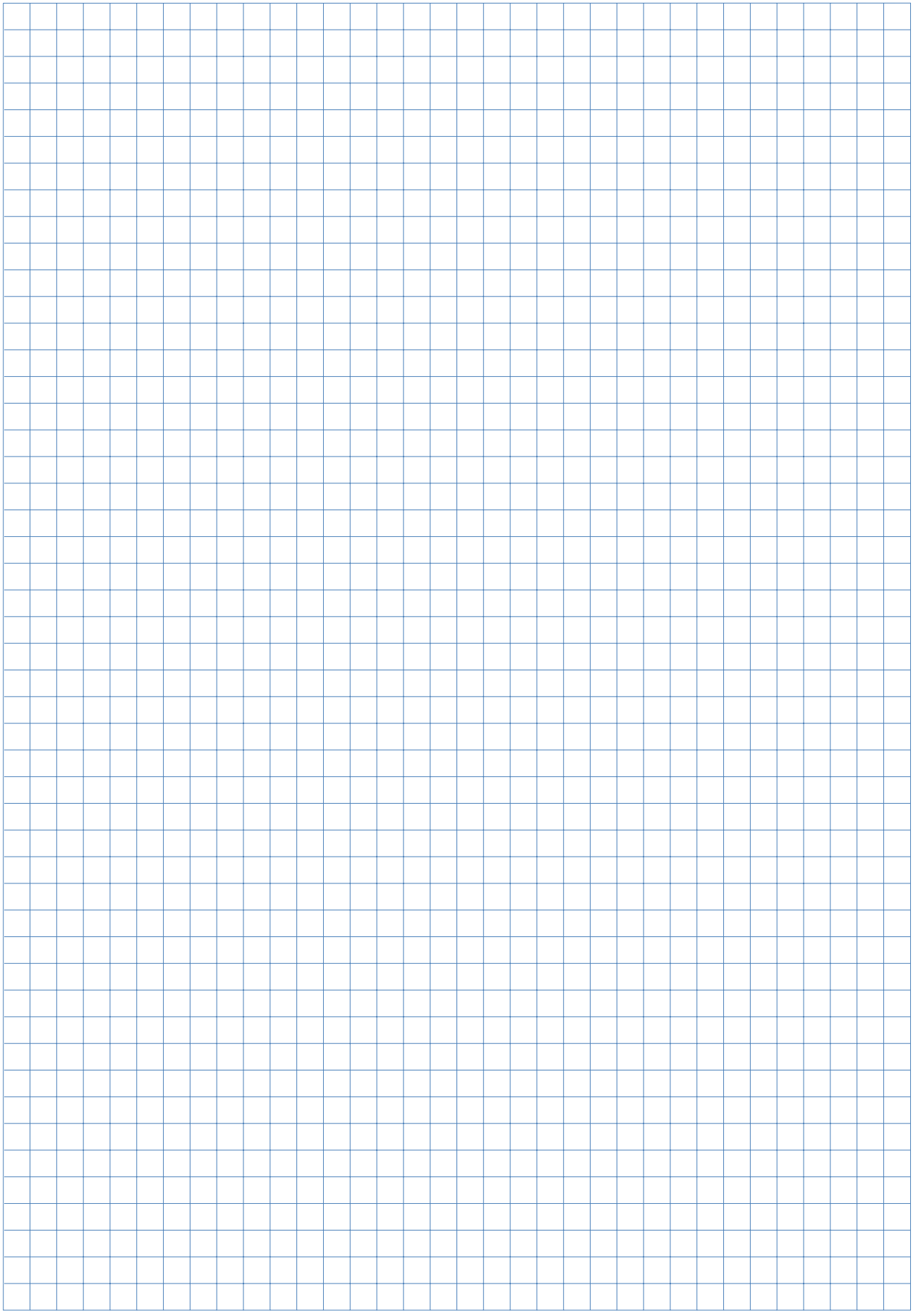

Foot switches



Electrical foot switches serve to operate DC actuators. The large-size buttons enable easy and precise control of the actuators. Depending on the plug the foot switches can be used on different control units.

Benefits

- Easy and precise
- Flexible and remote operation
- Ergonomic design
- Different plug options

Foot switches	Type	Operating power	Max. operating motors	Prot. class	Colour
		VDC/mA	n°	IP	
ST	ST	12/50	3	X5	Blue/anthracite
PFP	PFP1	–	1	21	Grey/anthracite
	PFP2	–	2	21	Grey/anthracite

Foot switches

ST

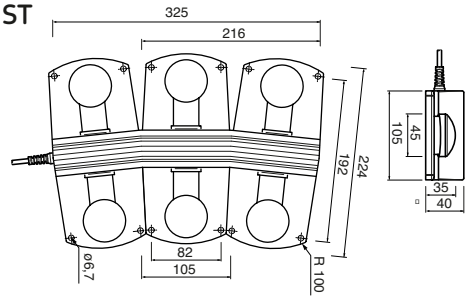

Type	Operating power	Max. operating motors	Protection class	Colour
	VDC/mA	n°	IP	
ST	12/50	3	X5	blue/anthracite

S T _ 0 _ - _ _ 000 - _ 00

Type

Product group:

Standard (only for KOM1)	F
For microprocessor units (only for KOM2)	G
For first failure safety units (only for KOM6)	H
Standard, single-fault-safe, HD15 plug	J

Voltage:

Not used	0

Number of channels:

One (1) channel	1
Two (2) channels	2
Three (3) channels	3

Cable/Connecting plug:

Coiled cable, 2,5 m with D-sub plug	LU
Coiled cable, 2,5 m with FCC plug	LV
Coiled cable, 2,5 m with HD15 plug	LW
Straight cable, 2,5 m with D-sub plug	0U
Straight cable, 2,5 m with FCC plug	0V
Straight cable, 2,5 m with HD15 plug	0W

Colour:

Charcoal	1
Blue (RAL5015)	4

Options:

None	000
Mounted with rubber feet	*MAY*
Mounted with threaded expansion inserts	*MCA*

Symbols:

Without symbols	00
Arrow up/down (on each pair of buttons), 1-3 channels	X1
Arrow up/down, M/1 (1 memory button), 2 channels	27
Arrow up/down, M/1, 2/3 (3 memory buttons), 3 channels	37

Options written in italic fonts are not available as standard. Please contact SKF for verification.

Accessories

Item	Symbol	Order number	Item	Symbol	Order number
Rubber feet		ZBE-135310	Symbol sticker	level down	135309-0008
Threaded expansion inserts		ZBE-521122	Symbol sticker	head up	135309-0009
Symbol sticker	arrow up	135309-0001	Symbol sticker	head down	135309-0010
Symbol sticker	arrow down	135309-0002	Symbol sticker	foot up	135309-0011
Symbol sticker	level up	135309-0007	Symbol sticker	foot down	135309-0012

PFP

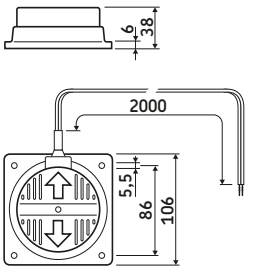

PFP 1K-130

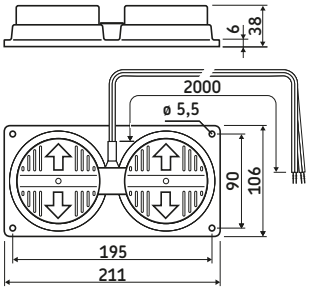

PFP 2-130

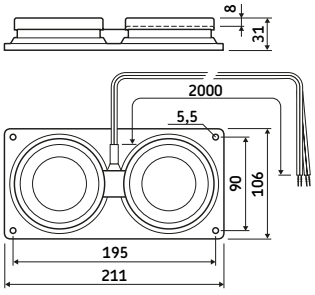

PFP 1-121

Type	Operating power	Max. operating motors	Protection class	Colour
	VDC/mA	n°	IP	
PFP 1K	N/A	1	21	grey/anthracite
PFP 1	N/A	1	21	grey/anthracite
PFP 2	N/A	2	21	grey/anthracite

Type code

P	F	P	1	K	-	1	3	0	6	5	2		
P	F	P	1		-	1	2	1	5	4	5		
P	F	P	2		-	1	3	0	5	6	0		

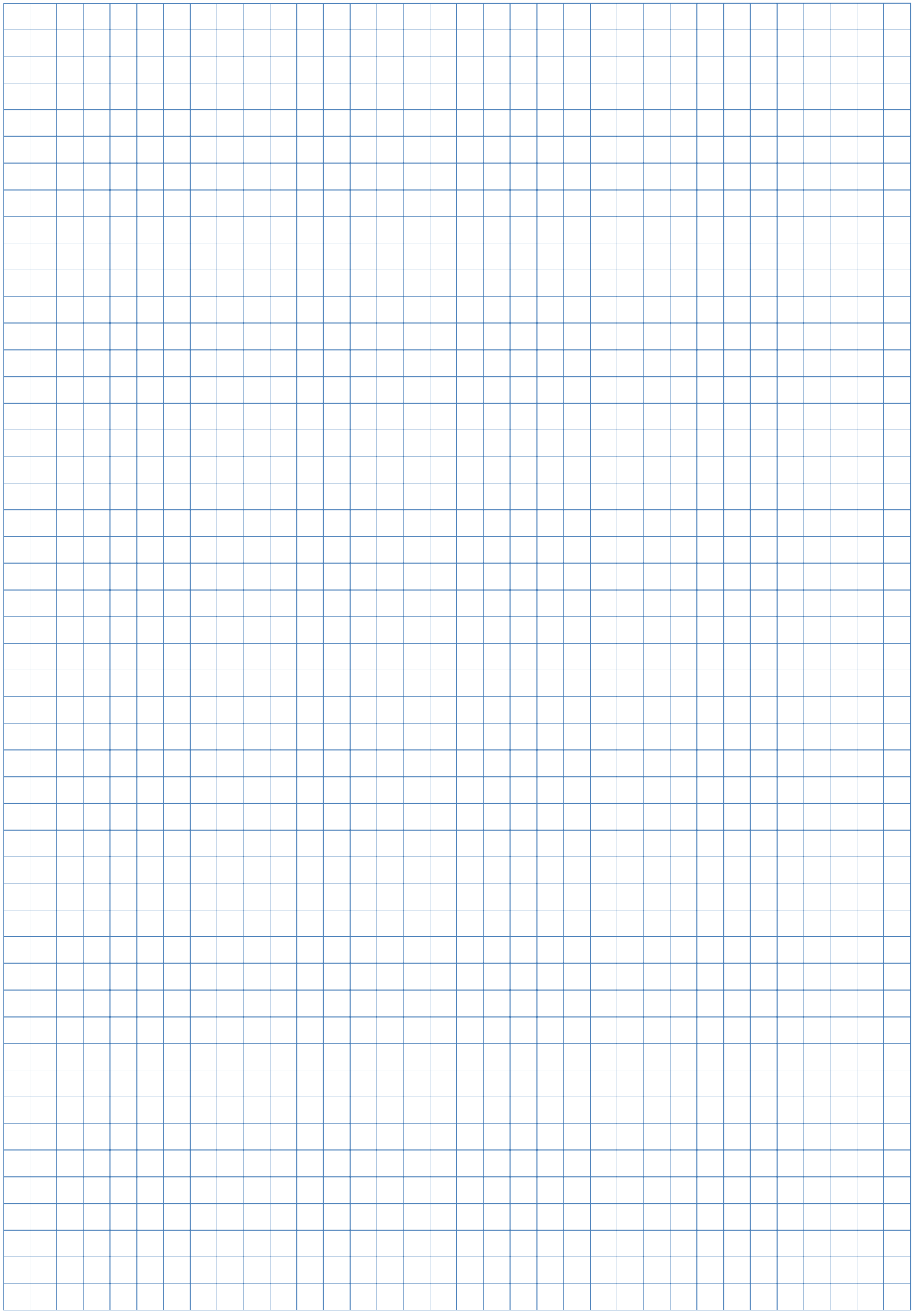

Desk switches



The desk switches serve for adjusting actuators in desks, chairs, couches and other adjustable furnitures. They allow to operate up to 3 actuator functions, also with memory positions, and can easily be fitted to furniture without compromising the design.

Benefits

- Easy and precise
- Stylish design
- Memory position

Desk switches	Type	Operating power	Max. operating motors	Protection class	Colour
		VDC/mA	n°	IP	
ST	ST	12/50	3	X0	Black
LD	LD	5/50	2	32	Black
CAFHT	T1	40/50	1	X4	Grey/black
	T2	40/50	2	X4	Grey/black
PAM	PAM 1-130256	-	1	-	Anthracite
	PAM 1-130348	-	1	-	Anthracite
	PAM 1-130659	-	1	-	Light grey
	PAM 1-130827	-	1	-	Light grey
	PAM 1-130966	-	1	-	Anthracite

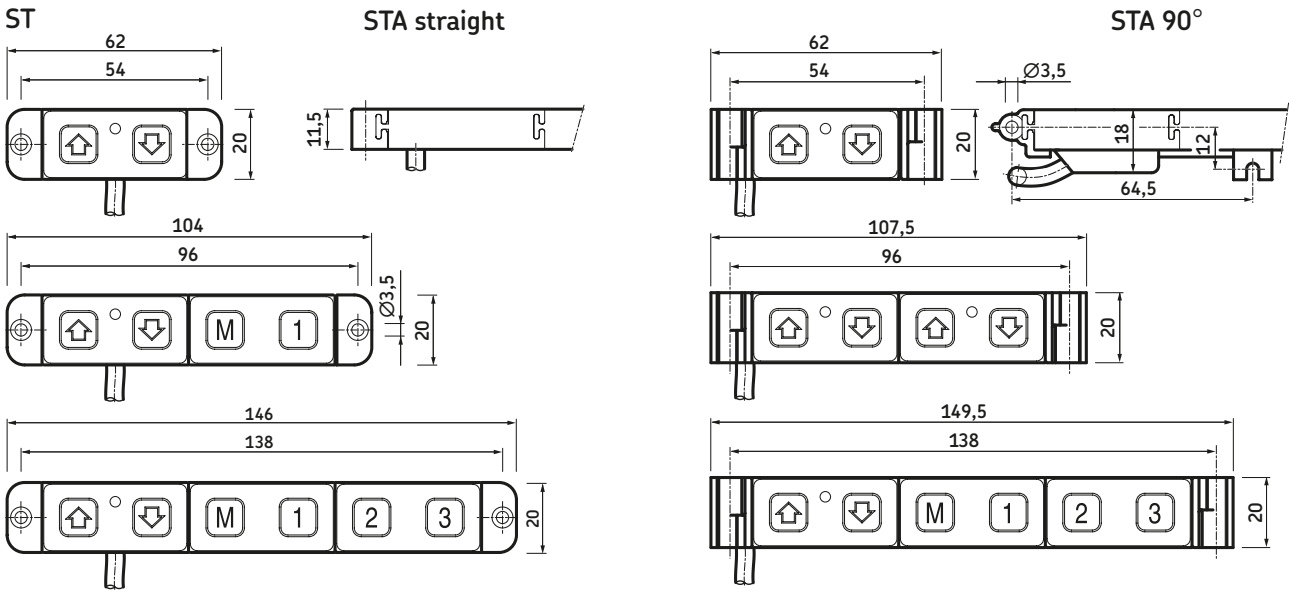
ST
STA straight
STA 90°

Type	Operating power	Max. operating motors	Protection class	Colour
	VDC/mA	n°	IP	
ST	12/50	3	X0	black

S T [ ] 0 [ ] - [ ] 6 [ ] - [ ] 00

Type

Product group:
Standard (only for KOM1) A
For microprocessor units (only for KOM2) C
Standard, single-fault-safe, HD15 plug E

Voltage:
Not used 0

Number of channels:
One (1) channel 1
Two (2) channels 2
Three (3) channels 3

Cable/Connecting plug:
Straight cable, 2,5 m with D-sub plug 0U
Straight cable, 1,5 m with D-sub plug WV
Straight cable, 2,5 m with FCC plug 0V
Straight cable, 1,5 m with FCC plug WV
Straight cable, 2,5 m with HD15 plug 0W

Colour:
Black 6

Options:
No option 000
Mounted on or underneath desktop, at a 90° angle MAU

Symbols:
Up/down arrow on each pair of keys (1-3 channels) X1
Up/down arrow, 1 memory function M/1 (2 channels) 27
Up/down arrow, 3 memory functions M/1, M/2, M/3 (3 channels) 37

Options written in italic fonts are not available as standard. Please contact SKF for verification.

Desk switches

LD

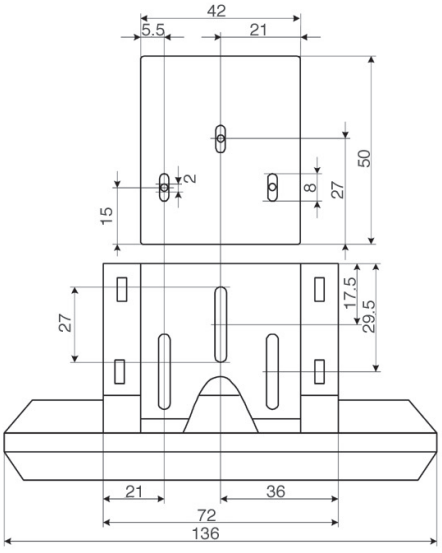

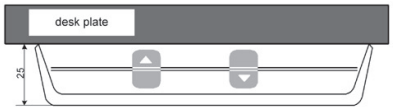

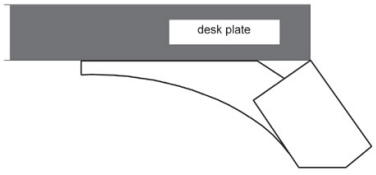

Type	Operating power	Max. operating motors	Protection class	Colour
	VDC/mA	n°	IP	
LD	5/50	2	32	black

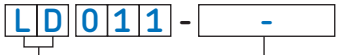

Type

1-channel, without display, for LD control units	001.005
1-channel, with memory keys, without display, for LD control units	*001.012*
1-channel, with memory keys, with display, for LD control units with FCC plug	002.016
1-channel, without memory and display, for TXG	001.006
1-channel, with memory keys, with display, for TXG	002.014

Options written in BLUE text are included in the Easy Range concept, which is our special service range for quick delivery from stock.
A type key made with ALL POSITIONS in BLUE qualifies a product for this service.
Options written in italic fonts are not available as standard. Please contact SKF for verification.

CAFHT

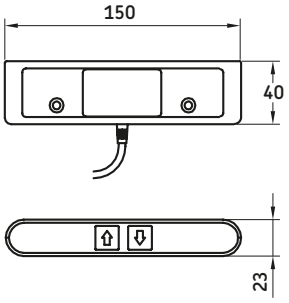

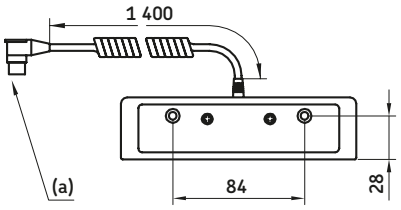

Legend:
(a) =DIN5 or DIN7

Type	Operating power	Max. operating motors	Protection class	Colour
	VDC/mA	n°	IP	
T1	40/50	1	X4	black /grey
T2	40/50	2	X4	black /grey

Type code

CAFH T1/S457D, 2 keys, grey
CAFH T2/S458D, 4 keys, grey
CAFH T1/S459D, 2 keys, black
CAFH T2/S460D, 4 keys, black

PAM (pneumatic switch)

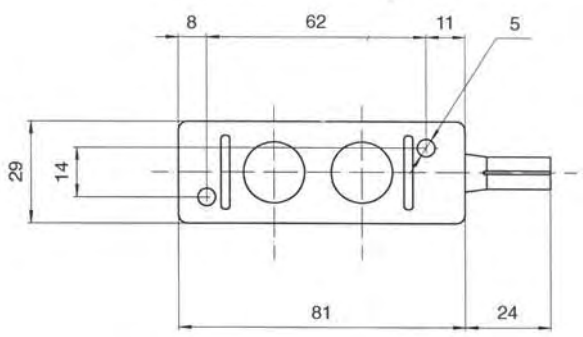

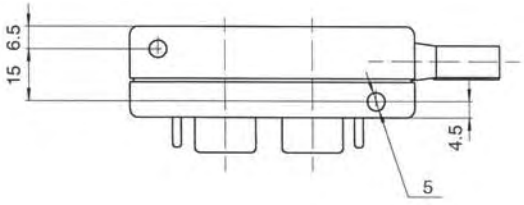

Type	Max. operating motors	Tube	Colour
	n°		
PAM 1-130827	1	none	light grey
PAM 1-130659	1	coiled, 2,65 m	light grey
PAM 1-130348	1	coiled, 2,65 m	anthracite
PAM 1-130256	1	straight, 1,50 m	anthracite
PAM 1-130966	1	straight, 3,00 m	anthracite

Notes

Easy3



SKF has put together actuator systems with component parts that are integrated to give you optimal safety and excellent reliability. Just switch the power on and you are ready for operation. The system can handle the indicated load with ease, in addition we have taken the extra precaution of building in adjustable end limits and overload protection to safeguard the equipment from impact damage.

Benefits

- Plug & play systems
- Easy to order
- Easy to install
- Easy to use

Type	Force push	pull	Max. speed no load	full load	Stroke (S)	Retr. length (L)	Voltage
	N	N	mm/s	mm/s	mm	mm	V AC/DC
Easy3-02	600	600	23	12	50-200	S+215	24 DC
Easy3-03	2 000	2 000	12	8	100-300	S+150	24 DC
Easy3-04	2 000	2 000	12	8	100-300	S+150	230 AC
Easy3-05	2 000	2 000	12	8	100-300	S+150	230 AC

Easy3-02

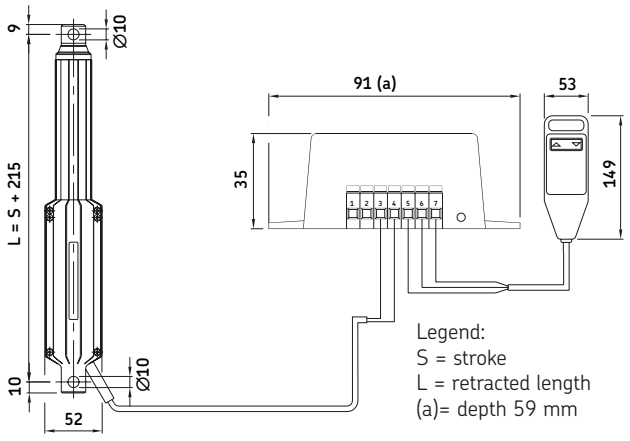

Legend:
S = stroke
L = retracted length
(a)= depth 59 mm

Technical data	Stroke (S)	Linear speed	Max dynamic load	Supply voltage
	mm	mm/s	N	VDC
EASY3-02	50-200	23-12	600	24

CALA36E302 X

Kit type

Stroke (S):

50 mm	50
100 mm	100
200 mm	200

Easy3-03

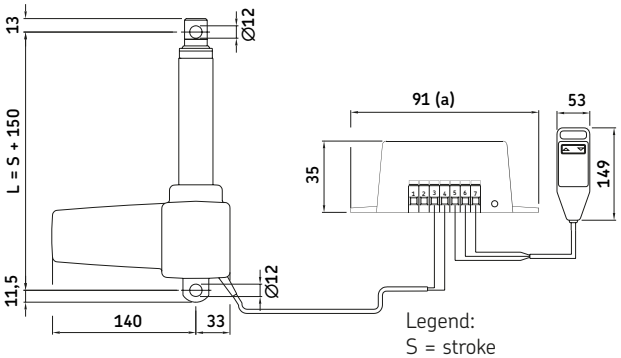

Legend:
S = stroke
L = retracted length
(a)= depth 59 mm

Technical data	Stroke (S)	Linear speed	Max dynamic load	Supply voltage
	mm	mm/s	N	VDC
EASY3-02	100-300	12-8	2 000	24

CARE33E303 X

Kit type

Stroke (S):

100 mm	100
200 mm	200
300 mm	300

Options written in BLUE text are included in the Easy Range concept, which is our special service range for quick delivery from stock.
A type key made with ALL POSITIONS in BLUE qualifies a product for this service.

Easy3-04

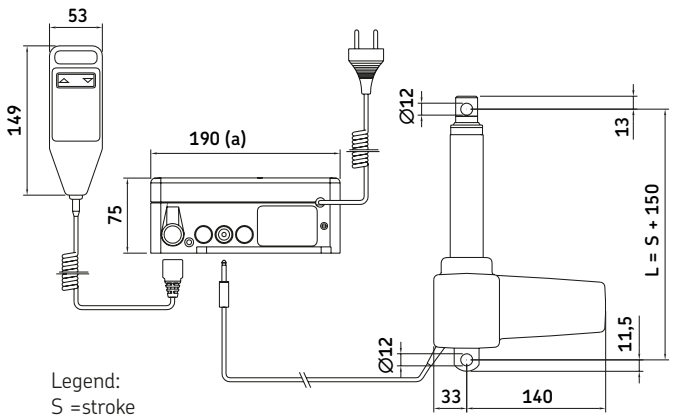

Legend:
S =stroke
L =retracted length
(a)=depth 150 mm

Technical data	Stroke (S)	Linear speed	Max dynamic load	Supply voltage
	mm	mm/s	N	VAC
EASY3-04	100-300	12-8	2 000	230

CARE33E304 X

Kit type

Stroke (S):
100 mm — 100
200 mm — 200
300 mm — 300

Easy3-05

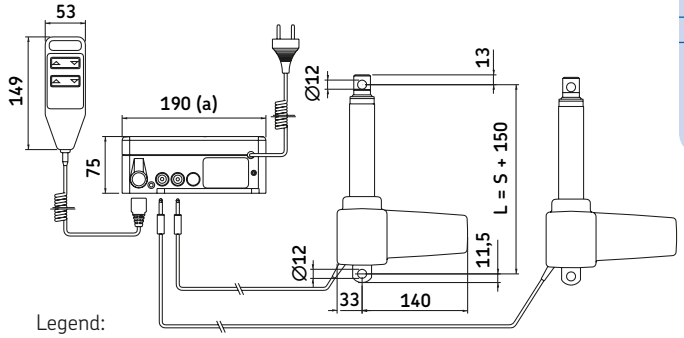

Legend:
S =stroke
L =retracted length
(a)=depth 150 mm

Technical data	Stroke (S)	Linear speed	Max dynamic load	Supply voltage
	mm	mm/s	N	VAC
EASY3-05	100-300	12-8	2 000	230

CARE33E305 X

Kit type

Stroke (S):
100 mm — 100
200 mm — 200
300 mm — 300

Options written in BLUE text are included in the Easy Range concept, which is our special service range for quick delivery from stock.
A type key made with ALL POSITIONS in BLUE qualifies a product for this service.

Guiding tube sets FRE

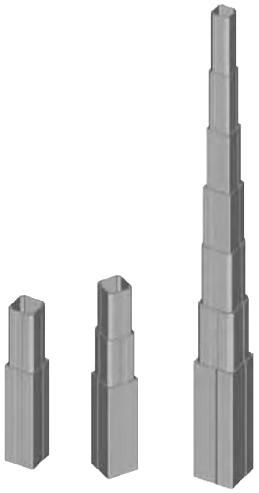

Guiding tube sets are suitable to be built into the base construction of tables, chairs or other applications. It is an open system in which any kind of actuation systems (electric or hydraulic) can be built in. The guiding tube sets are attractively designed, stable and can be used universally. They consist of high quality, precise anodized aluminium profiles.

Benefits

- Attractive design
- Stable
- Universal use

Type	Sections		Profile dimensions in mm							Retracted length in mm
	2 sections	3 sections	76x76	85x85	97x97	113x113	129x129	146x146	163x163	
FRE-A085	X									Stroke +138 mm
FRE-A113	X									Stroke +148 mm
FRE-A146	X									Stroke +168 mm
FRE-D097		X								Stroke +38 mm
FRE-D129		X								Stroke +53 mm
FRE-D163		X								Stroke +53 mm
FRE-B097	X									*N/A*
FRE-B129	X									*N/A*
FRE-B163	X									*N/A*
FRE-E113		X								*N/A*
FRE-E146		X								*N/A*

Options written in italic fonts are not available as standard. Please contact SKF for verification.

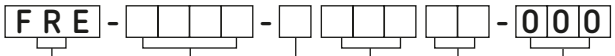

Type

Combination:

2 sections tube-set /Largest tube size	
85x85 mm	A085
113x113 mm	A113
146x146 mm	A146
97x97 mm	B097
129x129 mm	B129
163x163 mm	B163
3 sections tube-set /Largest tube size	
97x97 mm	D097
129x129 mm	D129
163x163 mm	D163
113x113 mm	E113
146x146 mm	E146
4 sections tube-set (on request)	*V_*
5 sections tube-set (on request)	*F_*
6 sections tube-set (on request)	*S_*
7 sections tube-set (on request)	*Z_*

Colour:

Natural anodized	5
Black anodized	6

Options:

No option	000
Cover	MCM
Pull version	MCN
Pull version, with cover	2EA

Stroke:

200 mm	20
300 mm	30
400 mm	40
500 mm	50
600 mm	60
700 mm	70
XXX mm (other strokes on request)	__

Customized options:

None	000

Options written in italic fonts are not available as standard. Please contact SKF for verification.

Project sales only

Linear drive profile



CAWA

The CAWA is a powerful, sturdy yet compact linear drive unit designed for vertically hanging loads. Its smooth operation and clean lines make it especially suitable for use in patient lifters and similar applications. The practical lifting capacity is defined by two components, the vertical load and the torque that the load generates on the drive unit's carriage. Carriages have been designed to cope with three ranges of torque. The CAWA is powered by a 24 VDC motor intended for intermittent use. The unit has fixed mechanical end stops. It is recommended that a current limit control set at a maximum of 12 A be used with the unit. This will protect the unit from dynamic overloads and the motor from premature failure. The CAWA can be easily mounted in an application using the T-slot running the full length of its body, with a suggested minimum support length of 150 mm. The motor unit is located under the body and can be mounted either on the application or on the drive unit using a simple motor bracket. Safety in service was a key design consideration of the CAWA unit. A metal back-up nut is fitted to the main driving nut to eliminate the risk of the carriage going out of control. The unit has also been tested to the following standards; CEN/TC293 203 and ISO123603-06. There are 54 combinations of stroke length and carriages available as standard.

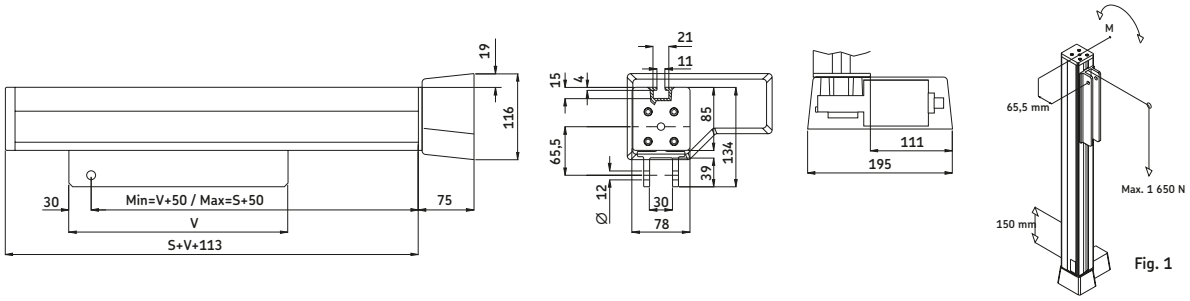

Fig. 1

Ordering key

Description	CAWA	500	X295	F	K	24
Position	1	2	3	4	5	6

Pos. 1 Type: CAWA
Pos. 2 Stroke (S) mm: 500, 600 700, 800 900 or 1 000
Pos. 3 Carriage (V) mm: X295, X395, or X495
Pos. 4 Motor bracket: Yes= F, No= No suffix
Pos. 5 Cover: Yes= K, No= No suffix
Pos. 6 Voltage VDC: 24

Technical data:

Stroke (S)	500, 600, 700, 800, 900, 1 000 mm
Max. dynamic load	1 650 N (See fig. 1)
Max. static load	3 500 N
Max. torque (M)	See fig. 1
295(V) mm carriage	750 Nm
395(V) mm carriage	1 050 Nm
495(V) mm carriage	1 350 Nm
Speed	See performance diagram
Current consumption	See performance diagram

Performance diagram:

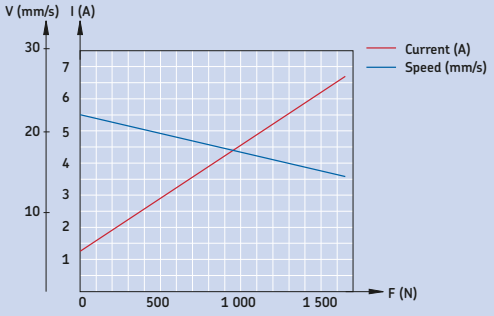

Type	Force push	Max. speed no load	Max. speed full load	Stroke (S)	Voltage	Protection class	Weight
	N	mm/s	mm/s	mm	VDC	IP	kg
CAWA	1 650	22	14	500-1 000	24	30	10-15

Notice! Please contact SKF for information regarding configuration and availability for this product

Project sales only

Rotary actuators



CRAB

SKF rotary actuators are designed to provide partial rotary motion. Fast or slow. Heavy or light duty. Complex or simple arrangements. The design of the rotary actuator enables very high torques. Furthermore, the power requirements are modest and the degree of efficiency is high. You can select the zero-backlash versions for maximum precision. Our other models provide reliable operation at a lower cost. With SKF rotary actuators you have complete units that are maintenance-free and do not require lubrication.

Benefits

- Ready to install component
- Outdoor application
- Elasticity negligible

More information is available in publication 6358

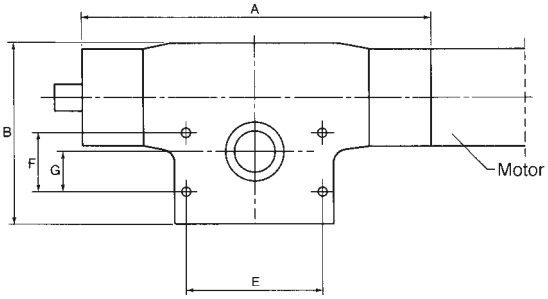

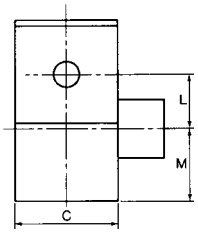

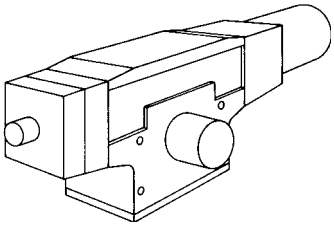

Actuator	A Dimensions in mm									
	≤110°	140°	160°	180°	200°	240°	270°	300°	330°	360°
CRAB 20	306	356	381	419	444	507	557	607	658	720
CRAB 30	455	532	579	626	689	783	846	924	1 003	1 097
CRAB 40	565	655	711	768	843	956	1 050	1 145	1 239	1 371

Actuator	Dimensions in mm						
	B	C	E	F	G	L	M
CRAB 20	155	90	120	50	35	46	63
CRAB 30	228	122	176	85	60	72	92
CRAB 40	286	134	230	115	80	92	116

Type	Max. angular working range	Gear ratio		Max. angular speed	Efficiency factor		Max. inst. output torque	Max. axial load	Max. tilting torque	Backlash		Start torque	Temp. range	Weight
		Ball screw	Acme screw		Ball screw	Acme screw				Ball screw	Acme screw			
	°			°/s	%	%	Nm	N	Nm			Nm	°C	kg
CRAB 10*	135	-	1:110	180	-	30	75	5 000	160	-	±0,35	0,3	-20 to +60	5
CRAB 11*	135	-	1:74	120	-	30	200	5 000	160	-	±0,30	0,3	-20 to +60	7
CRAB 12*	125	1:44	-	120	75	-	200	5 000	160	±0,05	-	0,3	-20 to +60	7
CRAB 13*	∞	-	1:38	120	-	40	150	5 000	160	-	±0,35	0,3	-20 to +60	6
CRAB 20	360	1:56	1:71	90	75	30	400	1 000	1 120	0,0	±0,20	0,5	-20 to +60	9
CRAB 30	360	1:88	1:88	60	75	30	1 000	1 500	3 465	0,0	±0,15	1,0	-20 to +60	25
CRAB 40	360	1:113	1:94	45	75	30	1 700	2 000	6 240	0,0	±0,10	2,0	-20 to +60	42

Project sales only

SKF ServoMove system

The SKF ServoMove system consists of a CAOP (Operator Interface) with integrated PLC (Programmable Logic Controller) and integrated local I/O module. The CAOP operates several newly designed linear servo actuators, as well as an unlimited number of sub-masters, offering cost-effective servo solutions for any situation. The CASI linear actuators are the electro-mechanical muscle of the SKF ServoMove. The CASI is a new, cost-effective, compact, in-line high-efficiency ball screw actuator with a brushless DC motor engineered with a modular concept in mind. The actuator has a built-in electronic drive and hall sensor for electronic commutation. The fact that CAOP is compatible with the majority and the most common PLC 's on the market makes it suitable as a master or secondary unit in any other PLC system.



Benefits

- Easy to use servo system
- Plug and play with SKF software

More information is available in publication 5323

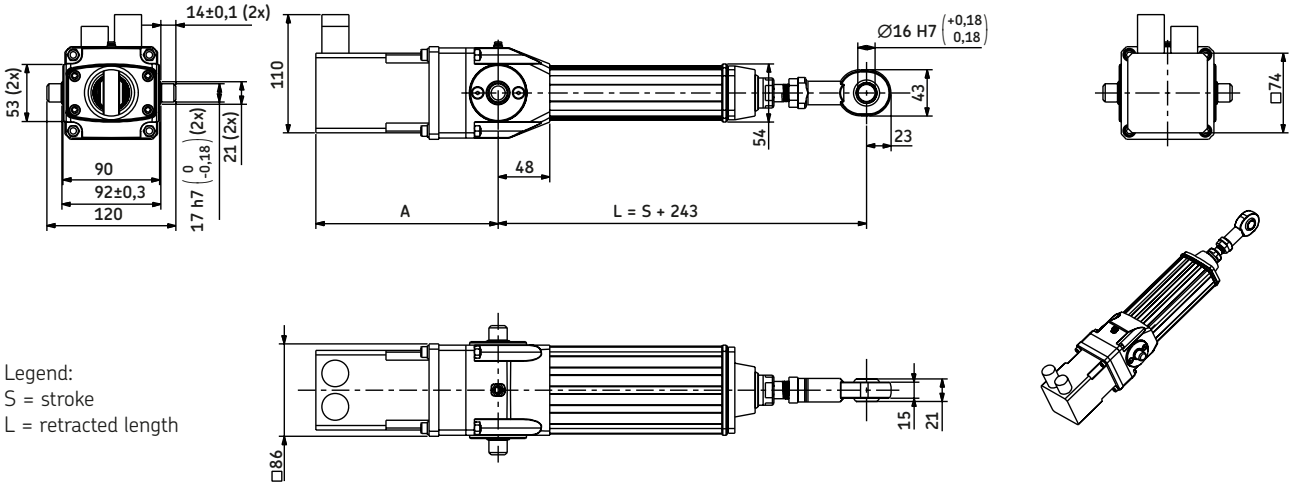

Legend:
S = stroke
L = retracted length

Project sales only

Compact electromechanical cylinder

Dynamic with high power for optimized process or machine control:
The design minimises inertia allowing excellent control, responsive performance, significantly improved cycle times and high productivity. The CEMC range integrates proven technologies in a compact robust package. Attributes include high acceleration, speed, precision, high load and a long life resulting in high reliability and maxmized machine availability.

Compact for all applications:
This product range provides high power density in a small package. Approximately 40 % smaller than standard electromechanical cylinders, there is the added advantage of reduced weight. Ideal for fixed and robot mounted applications. Whatever the requirement, CEMC cylinders provide a compact and dynamic solution, maximum performance and value through high availability, productivity and consequent low through life costs.



Benefits
- High power and reliability
- Compact and dynamic solution

More information is available in publication 5338

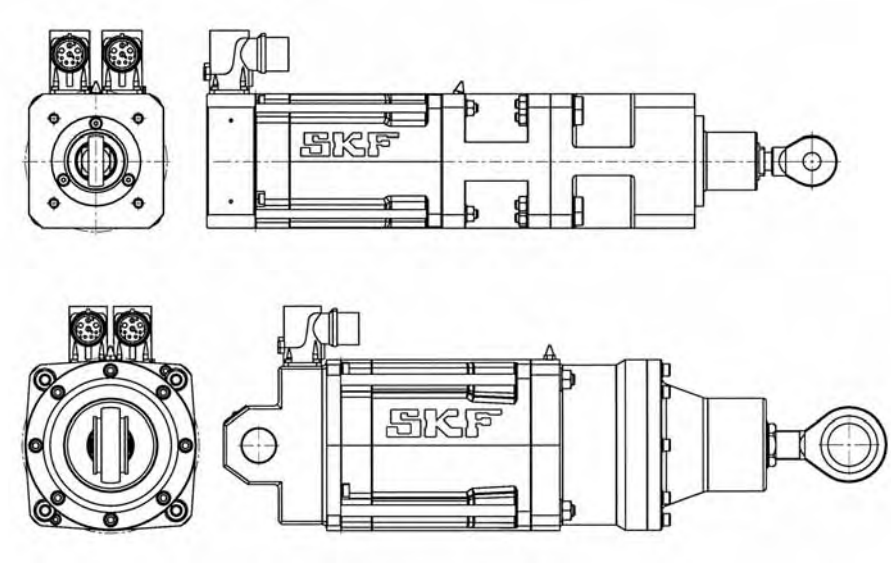

Type	Dynamic capacity C_a	Static capacity C_{oa}	Nominal load	Peak load	Speed
	kN	kN	kN	kN	mm/s
CEMC2404-xxx-62L	61	105	8,7	23,8	300
CEMC2406-xxx-62L	61	105	5,8	15,9	450
CEMC2407-xxx-62L	61	105	5,0	13,6	525
CEMC2404-xxx-63I	61	105	13,1	26,0	300
CEMC2406-xxx-63I	61	105	8,7	17,3	450
CEMC2407-xxx-63I	61	105	7,5	14,8	525
CEMC2404-xxx-63N	61	105	13,1	31,8	266
CEMC2406-xxx-63N	61	105	8,7	21,2	400
CEMC2407-xxx-63N	61	105	7,5	18,2	466
CEMC1804-xxx-42J	27	43	4,7	10,3	350

Project sales only

Standard plug & play electromechanical cylinder

SKF cylinders using SKF planetary roller screws are expanding the limits of linear cylinders. They are designed for long life, high acceleration and high force applications. The cylinders use brushless servo-motor technology, with an in-line direct drive as standard. The high performance electromechanical cylinder consists of an SKF planetary roller screw directly driven through a coupling by a brushless motor. The roller screw converts rotary motion into linear movement.





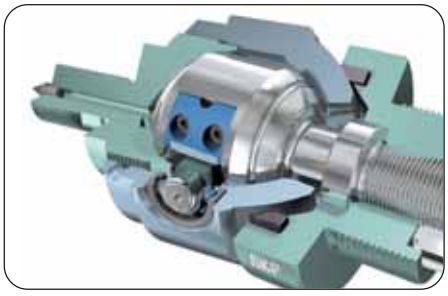

Benefits

- The power of hydraulics
- The velocity of pneumatics

More information is available in publication 5338

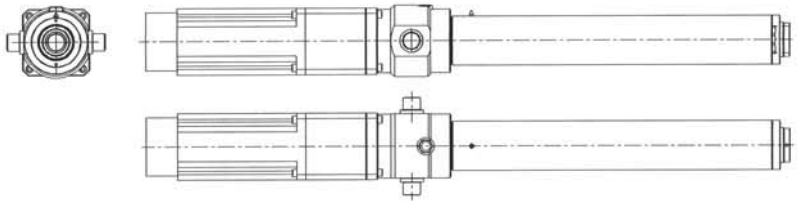

Designation	Mechanical performance				Performance*				
	Screw lead	Dynamic capacity	Static capacity	Speed	Nominal force	Peak force	Max. linear speed	Nominal torque	Maximum torque
	mm	N	N	rpm	N	N	m/min	Nm	Nm
SRSA2505	5	51 700	90 200	4 500	6 500	15 100	23	7	16
SRSA2510	10	59 400	87 800	4 500	6 200	12 500	40	12	24
SRSA3005	5	75 200	148 600	4 000	8 500	17 100	20	9	18
SRSA3010	10	88 900	145 300	4 000	6 200	12 500	40	12	24
SRSA3905	5	105 600	210 000	3 350	19 200	37 600	18	21	41
SRSA3910	10	124 800	210 000	3 350	14 200	28 000	35	28	55
SRSA4805	5	161 900	300 000	2 650	38 700	71 200	14	44	81
SRSA4810	10	189 300	300 000	2 650	34 200	52 100	28	69	105
SRSA4815	15	207 800	300 000	2 650	23 700	36 000	42	69	105
SRSA6010	10	276 800	460 000	2 150	47 700	71 600	22	100	150
SRSA6015	15	303 900	460 000	2 150	33 500	50 200	32	100	150
SRSA6020	20	303 900	460 000	2 150	26 000	39 100	43	100	150
SRSA7510	10	412 700	740 000	1 300	106 000	119 000	13	228	256
SRSA7515	15	458 900	740 000	1 300	74 400	83 600	20	228	256
SRSA7520	20	485 200	740 000	1 300	58 000	65 100	26	228	256
SLSA4020	20	35 300	81 700	2 250	5 700	11 100	45	21	41
SLSA4040	40	43 800	81 700	2 250	3 850	7 600	90	28	55

* Performance is given for one motor option. Several motor options are available. Contact SKF for application support.

CAR 22 – Type codes for accessories and spare parts

Item code	Type code
Limit switch for stroke =700 mm	CAXB 40 x 700
12 VDC motor (flat motor)	D12B
24 VDC motor (flat motor)	D24B
Limit switch for stroke =50 mm	CAXB 22 x 50
Limit switch for stroke =100 mm	CAXB 22 x 100
Limit switch for stroke =150 mm	CAXB 22 x 150
Limit switch for stroke =200 mm	CAXB 22 x 200
Limit switch for stroke =300 mm	CAXB 22 x 300
Proximity switch for CAXB	CAXB Proximity switch
Front mounting attachments type Rod-end	575-22
Front mounting attachments type Clevis	576-22
Rear mounting attachments type Single ear bracket	580-22
Rear mounting attachments type Ball-joint bracket	581-22
Control unit (suitable for D24B motor)	CAED 5-24R
Handset matched for CAED	CAES 31C

CAR 32 – Type codes for accessories and spare parts

Item Code	Type code
12 VDC motor (flat motor)	D12C
24 VDC motor (flat motor)	D24C
24 VDC motor (flat motor with brake)	D24CB
24 VDC motor (flat motor with extended shaft)	D24CS
24 VDC motor (flat motor with low speed)	D24CW
120 VAC motor (cylindrical motor)	E110C
120 VAC motor (cylindrical motor with brake)	E110CB
230 VAC motor (cylindrical motor)	E220C
230 VAC motor (cylindrical motor with brake)	E220CB
Capacitor value 25 µF (120 VAC)	Capacitor 25 µF
Capacitor value 6 µF (230 VAC)	Capacitor 6 µF
Limit switch for stroke =50 mm	CAXB 32 x 50
Limit switch for stroke =100 mm	CAXB 32 x 100
Limit switch for stroke =200 mm	CAXB 32 x 200
Limit switch for stroke =300 mm	CAXB 32 x 300
Limit switch for stroke =500 mm	CAXB 32 x 500
Limit switch for stroke =700 mm	CAXB 32 x 700
Proximity switch for CAXB	CAXB Proximity switch
Front mounting attachments type Rod-end	575-32
Front mounting attachments type Clevis	576-32
Rear mounting attachments type Single ear bracket	580-32
Rear mounting attachments type Universal joint	582-32
Control unit (suitable for C24C, D24C/CB/CS motors)	CAEP 10P-SL
Control unit (suitable for D24C/CB/CS motors)	CAEL 10-24R
Control unit (suitable for C24C, D24C/CB/CS motors)	CAEN 10R
Control unit (suitable for E110, E220 motors)	CAEV 110/220
Control unit (suitable for D24CW,C24CW motor)	CAED 5-24R
Control unit (suitable for D24C/CB/CS motors)	CAED 9-24R
Handset configured for CAEN, CAEP units	CAES 31B
Handset configured for CAED, CAEV, CAEL units	CAES 31C

Spare parts written in BLUE text are included in the Easy Range concept and available for quick delivery from stock.

CAR 40 – Type codes for accessories and spare parts

Item code	Type code
Limit switch for stroke =100 mm	CAXB 40 x 100
Limit switch for stroke =300 mm	CAXB 40 x 300
Limit switch for stroke =500 mm	CAXB 40 x 500
Limit switch for stroke =700 mm	CAXB 40 x 700
Proximity switch for CAXB	CAXB Proximity switch
Front mounting attachments type Rod-end	575-40
Front mounting attachments type Clevis	576-40
Rear mounting attachments type Single ear bracket	580-40
Rear mounting attachments type Ball-joint bracket	581-40
24 VDC motor (flat motor)	D24D
24 VDC motor (flat motor with extended shaft)	D24DS
24 VDC motor (flat motor with brake)	D24DB
120 VAC motor (cylindrical motor)	E110D
120 VAC motor (cylindrical motor with brake)	E110DB
230 VAC motor (cylindrical motor)	E220D
230 VAC motor (cylindrical motor with brake)	E220DB
Capacitor value 12 µF (230 VAC-motor)	Capacitor 12 µF

CAP 32 – Type codes for accessories and spare parts

Item code	Type code
12 V D motor (flat motor)	D12C
24 VDC motor (flat motor)	D24C
24 VDC motor (flat motor with brake)	D24CB
24 VDC motor (flat motor with extended shaft)	D24CS
24 VDC motor (flat motor with low speed)	D24CW
120 VAC motor (cylindrical motor)	E110C
120 VAC motor (cylindrical motor with brake)	E110CB
230 VAC motor (cylindrical motor)	E220C
230 VAC motor (cylindrical motor with brake)	E220CB
Capacitor value 25 µF (120 VAC)	Capacitor 25 µF
Capacitor value 6 µF (230 VAC)	Capacitor 6 µF
Limit switch for stroke =50 mm	CAXB 32 x 50
Limit switch for stroke =100 mm	CAXB 32 x 100
Limit switch for stroke =200 mm	CAXB 32 x 200
Limit switch for stroke =300 mm	CAXB 32 x 300
Limit switch for stroke =500 mm	CAXB 32 x 500
Limit switch for stroke =700 mm	CAXB 32 x 700
Proximity switch for CAXB	CAXB Proximity switch
Front mounting attachments type Rod-end	575-32
Front mounting attachments type Clevis	576-32
Rear mounting attachments type Single ear bracket	580-32
Rear mounting attachments type Universal joint	582-32
Control unit (suitable for D24C/CB/CS/CW motors)	CAEP 8V

CARN 32 – Type codes for accessories and spare parts

Item code	Type code
Limit switch for stroke =50 mm	CAXB 32 x 50
Limit switch for stroke =100 mm	CAXB 32 x 100
Limit switch for stroke =200 mm	CAXB 32 x 200
Limit switch for stroke =300 mm	CAXB 32 x 300
Limit switch for stroke =500 mm	CAXB 32 x 500
Limit switch for stroke =700 mm	CAXB 32 x 700
Proximity switch for CAXB	CAXB Proximity switch
Front mounting attachments type Rod-end	575-32
Front mounting attachments type Clevis	576-32
Rear mounting attachments type Single ear bracket	580-32
Rear mounting attachments type Universal joint	582-32

Spare parts written in BLUE text are included in the Easy Range concept and available for quick delivery from stock.

CCBR 32 – Type codes for accessories and spare parts

Item code	Type code
Limit switch for stroke =50 mm	CAXB 32 x 50
Limit switch for stroke =100 mm	CAXB 32 x 100
Limit switch for stroke =200 mm	CAXB 32 x 200
Limit switch for stroke =300 mm	CAXB 32 x 300
Limit switch for stroke =500 mm	CAXB 32 x 500
Limit switch for stroke =700 mm	CAXB 32 x 700
Proximity switch for CAXB	CAXB Proximity switch
Front mounting attachments type Rod-end	575-32
Front mounting attachments type Clevis	576-32

CAT 33 – Type codes for accessories and spare parts

Item code	Type code
12 VDC motor (cylindrical motor)	C12C
12 VDC motor (flat motor)	D12C
24 VDC motor (cylindrical motor)	C24C
24 VDC motor (cylindrical with low speed)	C24CW
24 VDC motor (flat motor)	D24C
24 VDC motor (flat motor with brake)	D24CB
24 VDC motor (flat motor with extended shaft)	D24CS
24 VDC motor (flat motor with low speed)	D24CW
120 VAC motor (cylindrical motor)	E110C
120 VAC motor (cylindrical motor with brake)	E110CB
230 VAC motor (cylindrical motor)	E220C
230 VAC motor (cylindrical motor with brake)	E220CB
400 VAC motor (cylindrical motor)	E380C
Capacitor value 25 µF (120 VAC)	Capacitor 25 µF
Capacitor value 6 µF (230 VAC)	Capacitor 6 µF
Limit switch for any stroke	CAXC33
Front mounting attachments type Rod-end	575-32
Front mounting attachments type Clevis	576-32
Rear mounting attachments type Single ear bracket	580-32
Rear mounting attachments type Universal joint	582-32
Control unit (suitable for C24C, D24C/CB/CS motors)	CAEP 10P-SL
Control unit (suitable for D24C/CB/CS motors)	CAEL 10-24R
Control unit (suitable for C24C, D24C/CB/CS motors)	CAEN 10R
Control unit (suitable for E110, E220 motors)	CAEV 110/220
Control unit (suitable for D24CW,C24CW motor)	CAED 5-24R
Control unit (suitable for D24C/CB/CS motors)	CAED 9-24R
Handset configured for CAEN, CAEP units	CAES 31B
Handset configured for CAED, CAEV, CAEL units	CAES 31C

Spare parts written in BLUE text are included in the Easy Range concept and available for quick delivery from stock.

CAT 33H – Type codes for accessories and spare parts

Item code	Type code
Rear mounting attachments type Universal joint	582-32
Control unit (suitable for C24C, D24C/CB/CS motors)	CAEP 10P-SL
Control unit (suitable for D24C/CB/CS motors)	CAEL 10-24R
Control unit (suitable for C24C, D24C/CB/CS motors)	CAEN 10R
Control unit (suitable for E110, E220 motors)	CAEV 110/220
Control unit (suitable for D24CW, C24CW motor)	CAED 5-24R
Control unit (suitable for D24C/CB/CS motors)	CAED 9-24R
Handset configured for CAEN, CAEP units	CAES 31B
Handset configured for CAED, CAEV, CAEL units	CAES 31C
12 VDC motor (cylindrical motor)	C12C
12 VDC motor (flat motor)	D12C
24 VDC motor (cylindrical motor)	C24C
24 VDC motor (cylindrical with low speed)	C24CW
24 VDC motor (flat motor)	D24C
24 VDC motor (flat motor with brake)	D24CB
24 VDC motor (flat motor with extended shaft)	D24CS
24 VDC motor (flat motor with low speed)	D24CW
120 VAC motor (cylindrical motor)	E110C
230 VAC motor (cylindrical motor)	E220C
230 VAC motor (cylindrical motor with brake)	E220CB
400 VAC motor (cylindrical motor)	E380C
Capacitor value 6 µF (230 VAC)	Capacitor 6 µF
Limit switch for any stroke	CAXC33
Front mounting attachments type Rod-end	575-32
Front mounting attachments type Clevis	576-32
Rear mounting attachments type Single ear bracket	580-32

Spare parts written in BLUE text are included in the Easy Range concept and available for quick delivery from stock.

CAT 32B – Type codes for accessories and spare parts

Item code	Type code
12 VDC motor (cylindrical motor)	C12C
12 VDC motor (flat motor)	D12C
24 VDC motor (cylindrical motor)	C24C
24 VDC motor (cylindrical with low speed)	C24CW
24 VDC motor (flat motor)	D24C
24 VDC motor (flat motor with brake)	D24CB
24 VDC motor (flat motor with extended shaft	D24CS
24 VDC motor (flat motor with low speed)	D24CW
120 VAC motor (cylindrical motor)	E110C
120 VAC motor (cylindrical motor with brake)	E110CB
230 VAC motor (cylindrical motor)	E220C
230 VAC motor (cylindrical motor with brake)	E220CB
400 VAC motor (cylindrical motor)	E380C
Capacitor value 25 μF (120 VAC)	Capacitor 25 μF
Capacitor value 6 μF (230 VAC)	Capacitor 6 μF
Limit switch for stroke =50 mm	CAXB 32 x 50
Limit switch for stroke =100 mm	CAXB 32 x 100
Limit switch for stroke =200 mm	CAXB 32 x 200
Limit switch for stroke =300 mm	CAXB 32 x 300
Limit switch for stroke =400 mm	CAXB 32 x 400
Limit switch for stroke =500 mm	CAXB 32 x 500
Limit switch for stroke =700 mm	CAXB 32 x 700
Proximity switch for CAXB	CAXB Proximity switch
Front mounting attachments type Rod-end	575-32
Front mounting attachments type Clevis	576-32
Rear mounting attachments type Single ear bracket	580-32
Rear mounting attachments type Universal joint	582-32
Control unit (suitable for C24C, D24C/CB/CS motors)	CAEP 10P-SL
Control unit (suitable for D24C/CB/CS motors)	CAEL 10-24R
Control unit (suitable for C24C, D24C/CB/CS motors)	CAEN 10R
Control unit (suitable for E110, E220 motors)	CAEV 110/220
Control unit (suitable for D24CW, C24CW motor)	CAED 5-24R
Control unit (suitable for D24C/CB/CS motors)	CAED 9-24R
Handset configured for CAEN, CAEP units	CAES 31B
Handset configured for CAED, CAEV, CAEL units	CAES 31C

CAP 43 – Type codes for accessories and spare parts

Item code	Type code
24 VDC motor (cylindrical motor)	C24C
24 VDC motor (cylindrical with low speed)	C24CW
24 VDC motor (flat motor)	D24C
24 VDC motor (flat motor with low speed)	D24CW
Front mounting attachments type Rod-end	575-32
Front mounting attachments type Clevis	576-32
Rear mounting attachments type Single ear bracket	580-32
Rear mounting attachments type Universal joint	582-32
Control unit (suitable for D24C motors)	CAED-ANR

580-22

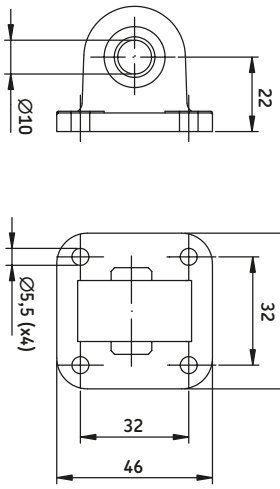

580-32

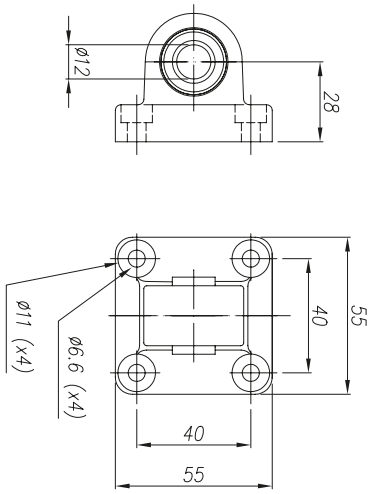

580-40

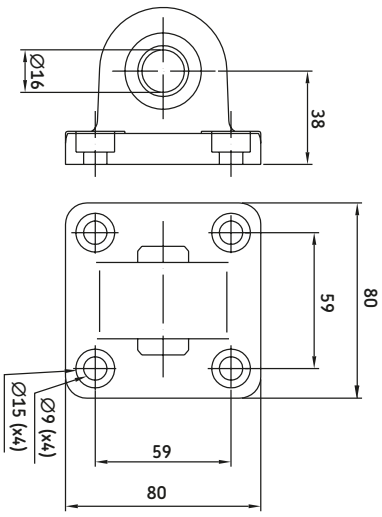

581-22

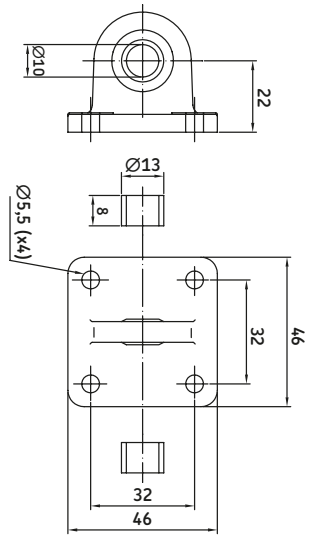

581-40

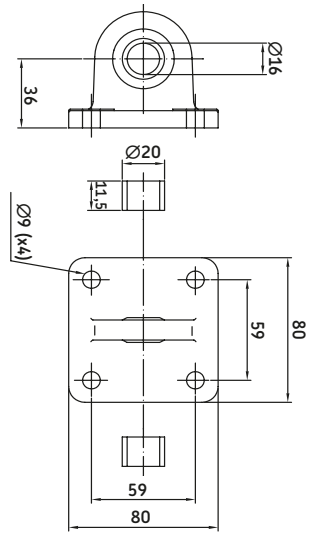

582-32

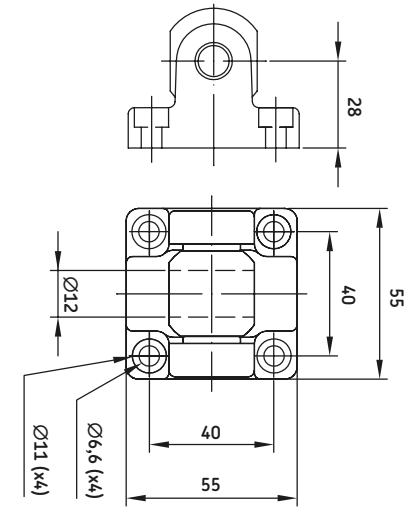

575-22

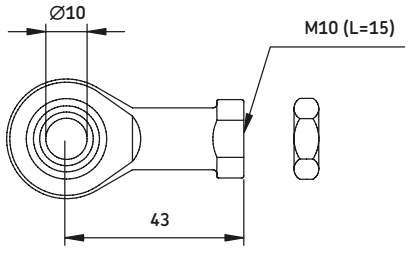

575-32

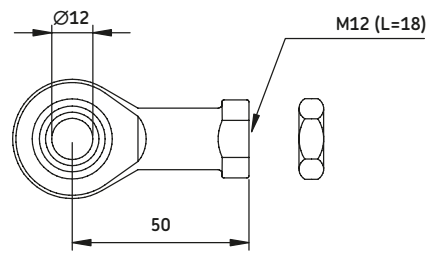

575-40

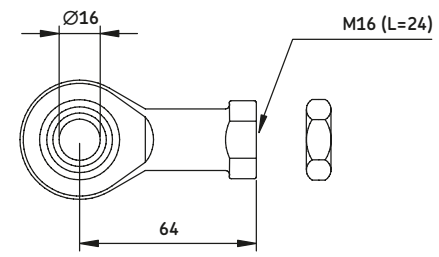

576-22

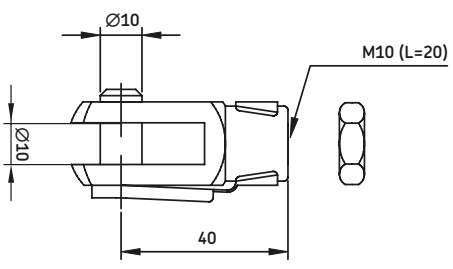

576-32

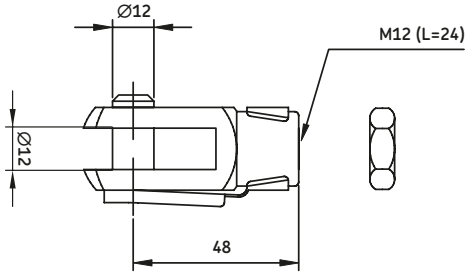

576-40

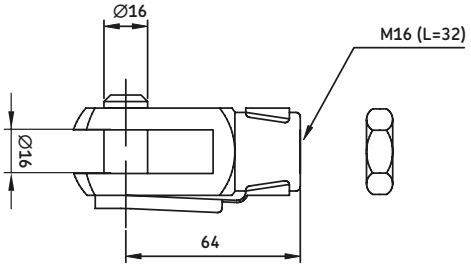

Spare parts written in BLUE text are included in the Easy Range concept and available for quick delivery from stock.

CAXC 33 limit switch

Limit switches, combined with SKF control units make it possible to set the stroke to any desired length. Use of limit switches results in reduced effective stroke length by 20 mm (inner position is affected)

- CAXC 33 - designed for actuator series with 33 mm aluminium protection tube
  CATR/L 33
  CALA 36
  CARE 33A
  CARE 33M
- Proximity switches - connect to control unit according to the wiring diagram



CAT actuator series



CALA actuator series

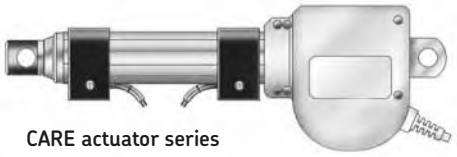

CARE actuator series

Technical data:

Permissible power:	3 W
Max. DC voltage:	200 V
Max. DC current:	200 mA

Dimensions:

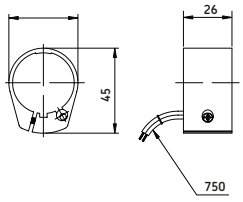

Wiring diagram:

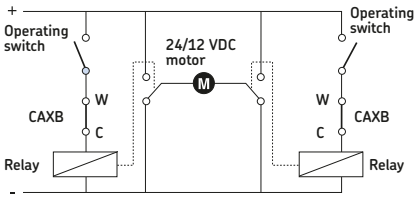

Switch function:

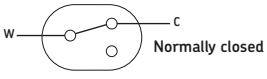

Ordering code:
CAXC 33
NB! One CAXC is needed for each limit position.

NB! Make sure you connect limit switches to a DC-supply.

CAXB 22/32/40 limit switches

CAXB 22

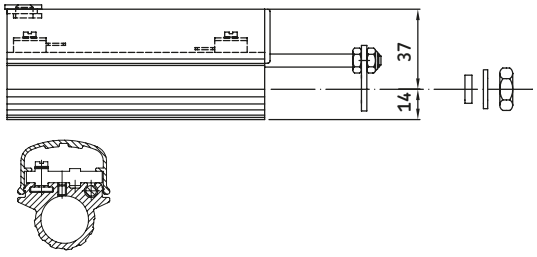

CAXB 32B

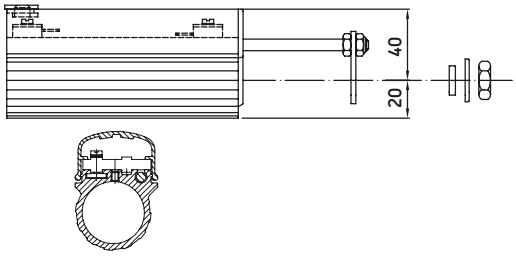

CAXB 32

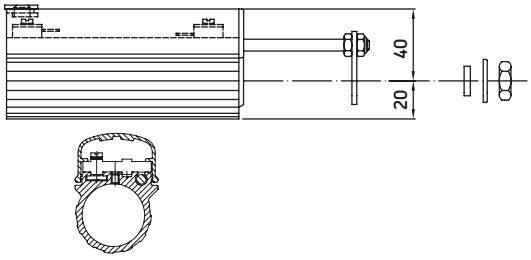

CAXB 40

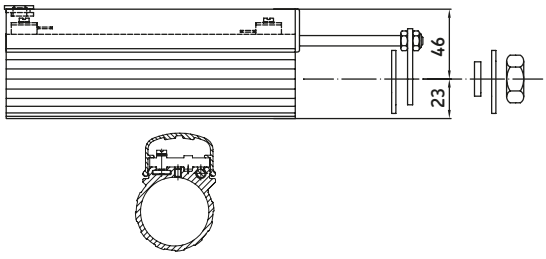

Spare parts written in BLUE text are included in the Easy Range concept and available for quick delivery from stock.

D12C/D24C

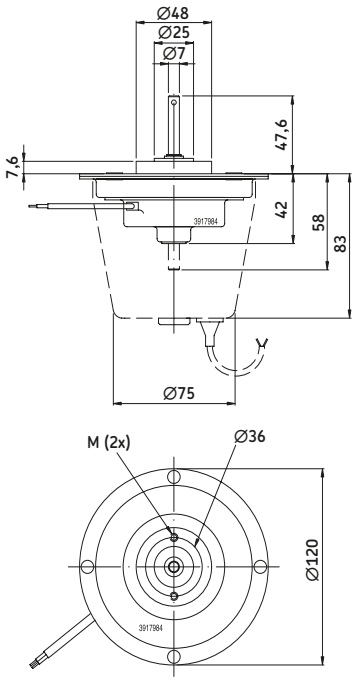

D24D

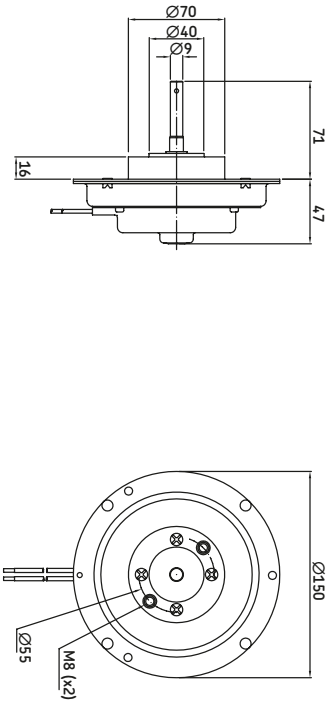

E220C

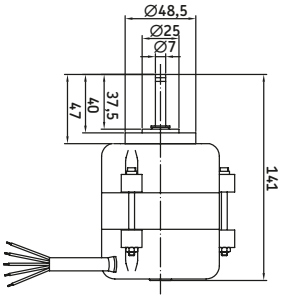

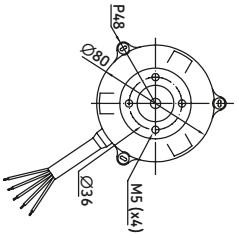

E220D

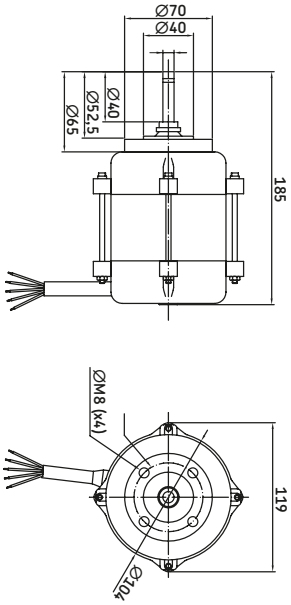

D24D/D24DB/D24DS

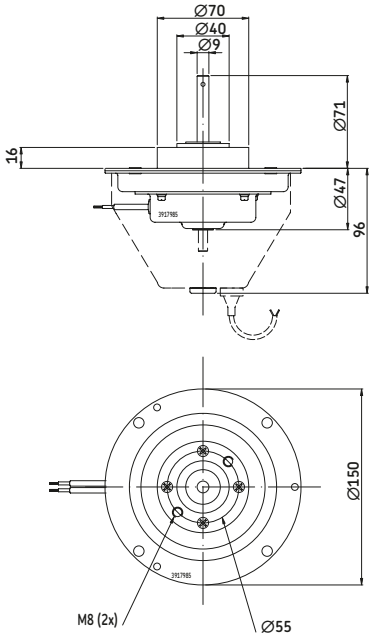

D12B/D24B

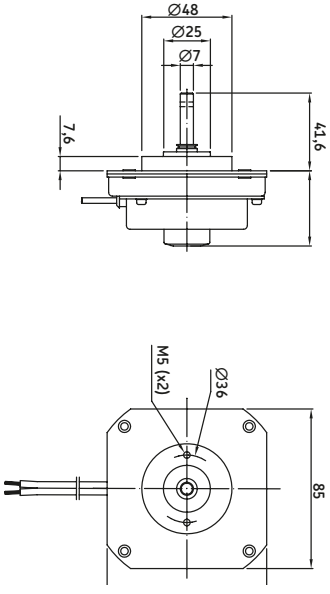

Spare parts written in BLUE text are included in the Easy Range concept and available for quick delivery from stock.

Anti-pinching (electric)
A safety option that is available on certain SKF actuators. It shuts off the motor when an external force is applied in the opposite direction to the direction of travel.

Anti-pinching (mechanical)
This safety mechanism allows the actuator to push but not pull or pull but not push. This feature is designed to prevent injury to persons due to being trapped by the force of the actuator.

Back-up nut
A nut, usually metal, of greater anti-shear strength than the drive nut and which only makes contact with the threads of the spindle when the threads of the drive nut fail.

Emergency lowering
The emergency lowering safety feature enables the actuator to be lowered in the event of a power failure or malfunction. This option is used in most medical and health care applications.

Encoder
A rotary or linear sensor device that, when connected to a control unit, can be used to determine the position of an electric linear actuator.

First failure safety
First failure safety is a control system utilising redundant microprocessors in which one processor monitors the functions of the other and shuts down the system if a malfunction in the microprocessor occurs.

Hall sensor
A sensor whose output changes based on changes in magnetic flux. Typically used for RPM, position, or current measurement.

IP protection
This standard describes a system for classifying the degrees of protection required by the enclosures of electrical equipment. Developed by the European Committee for Electro-technical Standardization (CENELEC), these standards are designed to numerically rate an electrical product based on the level of protection its enclosure provides.

Limit switches
A switch used to limit motion or travel in a particular direction. Mechanical devices that when activated open or close an electrical contact. When the contact is closed voltage will flow through the switch, when open no voltage will flow through the switch. Limit switches come in various physical sizes and configurations and can be mounted internally or externally.

Potentiometer
The potentiometer is a displacement transducer. It incorporates the sensor and transducer function into one. A typical potentiometer consists of a uniform coil of wire of an element of high resistance such as carbon, platinum or conductive plastic. This uniform coil makes up the resistive element of the potentiometer whose resistance is proportional to its length.

Pull force
The maximum retracting force that an electric linear actuator can produce in Newton (N). Some SKF actuators do not produce equal push and pull forces and others do not permit pull force at all.

Push force
The maximum extending force that an electric linear actuator can produce in Newton (N). Some SKF actuators do not produce equal push and pull forces and others do not permit pull force at all.

Stroke length
Describes the length in millimetres that an electric linear actuator will extend or retract. Most standard products are available in increments of 50 mm or 100 mm. Customer specific lengths are available, minimum order quantities apply.

Thermal protection
Protects drives and control units from overheating. A device that signals when an electrical assembly becomes too hot. The signal usually causes the shut-off of the electrical device.

Linear speed
Linear speed is the term used when we talk about the distance, in millimetres, the tube in an actuator moves linearly over a given period of time (mm/s.), moving a load from its starting point to a new position. The speed can vary in different ways, depending, for example, on the motor employed. Actuators with direct current (DC) motors have a speed variation directly proportional to the load on the device. That is to say, the larger the load, the lower the speed and vice versa. Actuators with alternating current (AC) motors move at a constant speed, which is not affected by the load on the actuator. Other factors affecting speed include ambient temperature and how well or poorly the actuator is integrated within an application. An actuator integrated in such a way that it is subject to uneven loads wears abnormally, which results in increased friction forces and decreased speed.

Dynamic load
Maximal dynamic load refers to the maximum total weight or mass the actuator can move. Often, the decisive factor for maximal load is the size of the motor and the gearing employed. When an actuator is subject to loads exceeding the maximum stated value, the device simply stops. Certain actuator types have an integral mechanical safety device similar to a slip-clutch, designed to protect the motor and

gears from damage. Electrical limit switches are another alternative. These protect the actuator from damage caused by excessive electrical current. All such safety devices are part of an operating system and it is important to be aware of them when using SKF actuators with other operating equipments.

Static load (value not available in this brochure)
Maximal static load refers to the weight or mass that an actuator can be subjected to when standing still without causing permanent damage or causing the actuator to start "going backwards". Subjecting an actuator to loads in excess of stated values can risk permanent deformation to some parts of the actuator. N.B. Remember that in many applications and installations, it is not the weight applied directly but rather the load caused by leverage or similar forces acting on the actuator that are the decisive factors. An actuator is strongest in its shortest position and weakest in its outermost, most extended position.

DC motors
An electric motor powered by direct current electricity (12-48 VDC) that can be run on batteries. These motors are suitable for use in situations where you want to be able to move the product easily and do not want a cable in the way. The speed of a DC motor is directly proportional to the load, i.e., the motor moves slowly under maximum load and fastest when run with no load at all. In many applications the actuator works both pushing and pulling, which means that the load works to "assist" in one direction and "resist" in the other. Consequently, considerable speed variations can arise.

AC motors
An electric motor powered by alternating current electricity (120-400 VAC), which requires an electrician for its connection. Start-up properties can be improved with various accessories and different methods of connection. There are many standard accessories available for control and regulation of an AC motor. An AC motor is best suited to non-mobile products, i.e., fixed installations, often in industrial environments. An actuator with an AC motor is less sensitive to load variations and maintains virtually the same speed regardless of load. The normal working temperature for this type of motor is 70 °C. An AC motor has few moving parts that wear and is consequently rugged and has a long life span.

Retracted length
"Retracted length" is an expression for the shortest distance between the two fixed points on an actuator when the actuator is in its innermost position. The dimensions given reflect a measurement from the centre of the mounting holes, which means that the actuator requires a few millimetres beyond the given "retracted length" in order to fit. Remember that very few actuators are symmetrical. Thus it is important to note other dimensions as well for optimum fit and integration of the actuator. An actuator should always be mounted, insofar as is possible, so that it works linearly over its entire working range.

Duty factors
A technical term expressing how long a motor can handle non-stop operation before it becomes overheated or otherwise damaged. It should be noted that "Duty Factor", whether expressed as a percentage or time, varies depending on the working load for the motor. The duty cycle tells how often an actuator will be in operation within an application and the amount of time between operations. Because of the power lost due to inefficiency dissipated as heat, the actuator component with the lowest allowable temperature – usually the motor – sets the duty cycle limit for the complete actuator. Although, there is some heat loss from friction in the gearbox and by ball screw and acme screw drive systems. An example of a duty cycle calculation: assume an actuator runs for 10 seconds cumulatively, up and down, and then does not run for another 40 seconds. The duty cycle is 10/(40+10), or 20 %.

Temperature
Ambient work site temperature can be highly significant when making a choice between different actuators. Extreme heat or cold can reduce the working capacity of the equipment. If the equipment is used in temperatures as low as about – 20 °C, for instance, the lubricant can harden and impair the efficiency of the motor. If the temperatures climb up towards 50 °C, for instance, the grease can melt so that it drains away from the screw system, resulting in reduced or eliminated lubricant effect and increasing the risk of overheating in the motor.

Power consumption
An expression of how much electricity the motor uses when working. For DC motors the power consumption is directly proportional to the load, and for AC motors the power consumption is constant. With alternating current, power consumption is low, so that simple cabling and other inexpensive accessories suffice. Installation is easy and the components are readily available. With battery operation, it is often
adequate to use a small, lightweight battery that does not require much space and is relatively inexpensive.

Supply voltage
Supply voltage is a measure of the voltage supplying a system, regardless of whether it employs AC or DC motors.

Properties of the sliding screw (Fig.1)
Sliding screws are manufactured from rolled steel and the nut is made of plastic. This is a relatively cost effective design with favourable properties: plastic and metal work well together without binding. Also, actuators incorporating sliding screws usually offer a price advantage over those built around other types of screws. The sliding screw works very quietly, which means that it is well suited for office environments, hospitals, etc. Another significant advantage is the high friction coefficient in the sliding screw. This design is particularly well suited for actuators used in applications where they should be self locking, i.e., will not begin "moving backwards" under the weight of the load. For instance, when using the actuator to drive vertically adjustable tables, a sliding screw design allows you to put heavy loads on the surface of the table without changing its vertical position. In short, this means that no additional locking mechanism or brake will be necessary to keep the actuator in position when it is not in operation (however, e.g., in extreme vibrating application types additional arrangements may be needed to prevent back driving).

Properties of ball screws (Fig.2)
The ball screws incorporated in SKF actuators are manufactured entirely from steel and equipped with a row of bearings located in a closed system between the nut and screw. The design yields extremely low friction coefficients between the nut and the screw, because of the rolling contact between the balls, the nut and raceway (similar to ball bearings). Wear is significantly reduced compared with a sliding screw, which results in a life span 10 times longer for a ball screw under the same working conditions. The durability of the screw also means that it tolerates extreme loads as well as high duty cycles. Thanks to its low frictional resistance, the ball screw can maintain a very low operating temperature. As a consequence, the ball screw is particularly well suited for situations where it is required to operate over long periods at high speeds. High efficiency is one of the main characteristics of ball screws. Thanks to this high efficiency, it is possible to use a motor half the size compared to a sliding screw design. This means that, as a user, you obtain a more economical solution. An actuator based on a ball screw has minimal play, and consequently its precision is significantly higher in applications where positioning and repetitive precision are important.

Self-locking
This property of the actuator means that it will not continue to move under the weight of the load after it has been switched off. The self-locking ability depends on the total efficiency of the actuator. If an actuator is not self-locking the function can be obtained by using a brake. On DC motors, the motor has to be short circuited. Self-locking load can under certain circumstances not be completely ensured on all actuator models due to the type of application being run (e.g., high vibration levels)!

Alignment
It is important that the product is mounted properly from the beginning. If the actuator is improperly installed, normal operation may cause poor performance. Remember, therefore, to carefully follow the accompanying mounting instructions. Naturally, you can turn to your supplier or distributor whenever you have questions about our products.



Fig. 1

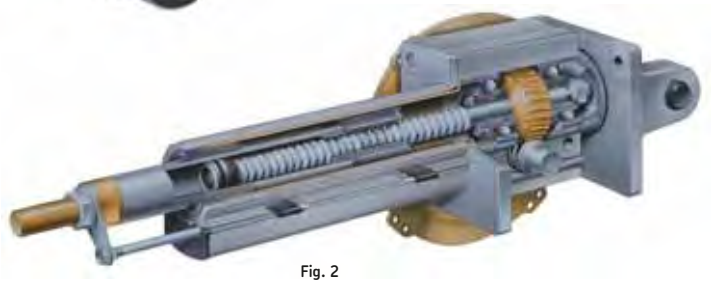

Fig. 2

Notes



Notes

JAEGER magnetic

Actuation systems







Contacts

Linear motion from SKF
www.linearmotion.skf.com

Benelux
SKF Multitec Benelux B.V.
Nederland
Tel +31 030 6029 029
Fax +31 030 6029 028

België & Luxembourg
Tel +32 25 024 270
Fax +32 25 027 336
E-mail multitec_benelux@skf.com

Brasil
SKF do Brasil Ltda
Tel +55 11 461 991 114
Fax +55 11 461 991 99
E-mail marketing.skf@skf.com.br

Canada
SKF Canada Limited
Tel +1 416 299 1220
Fax +1 416 299 6548
E-mail www.marketing@skf.ca

Danmark
SKF Multitec
Tel +45 65 92 77 77
Fax +45 65 92 74 77
E-mail customerservice.multitec@skf.com

Deutschland
SKF Linearsysteme GmbH
Tel +49 9721 657 232/233
Fax +49 9721 657 111
E-mail lin.sales@skf.com

Magnetic Elektromotoren GmbH
Tel +49 7622 695 0
Fax +49 7622 695 101
E-mail magnetic.germany@skf.com

España & Portugal
SKF Productos Industriales S.A.
Tel +34 93 377 99 07/-77
Fax +34 93 474 2039/-2156
E-mail prod.ind@skf.com

France
SKF Equipements
Tel +33 1 30 12 73 00
Fax +33 1 30 12 69 09
E-mail equipements.france@skf.com

Italia
SKF Multitec S.p.A.
Tel +39 011 22 49 01
Fax +39 011 22 49 233
E-mail multitec.italy@skf.com

Mexico
SKF de México S.A. de C.V
Tel +52 222 229 4900
Fax +52 222 229 4908
Web www.skf.com.mx

Norge
SKF Multitec
Tel +47 22 90 50 00
Fax +47 22 30 28 14
E-mail customerservice.multitec@skf.com

Schweiz
Magnetic Elektromotoren AG
Tel +41 52 305 02 02
Fax +41 52 305 02 05
E-mail magnetic.switzerland@skf.com

SKF LM&PT
Tel +41 44 825 81 81
Fax +41 44 825 82 82
E-mail skf.schweiz@skf.com

Suomi
SKF Multitec
Tel +358 9 615 00 850
Fax +358 9 615 00 851
E-mail multitec.nordic@skf.com

Sverige
SKF Multitec
Tel +46 42 253 500
Fax +46 42 253 545
E-mail customerservice.multitec@skf.com

Taiwan
Jaeger Industrial Co., Ltd.
Tel +886 2 2917 4441
Fax +886 2 2917 8362
E-mail sales@jaeger-group.com

U.K.
SKF (UK) Ltd
Tel +44 1582 496 735
Fax +44 1582 496 574
E-mail a&mc@skf.com

USA
SKF Motion Technologies
Tel +1 610 861 3700
Toll free +1 800 541 3624
Fax +1 610 861 3716
E-mail motiontech.usa@skf.com

Österreich
SKF Linearsysteme GmbH
Tel +49 9721 657 232/233
Fax +49 9721 657 111
E-mail: lin.sales@skf.com

Other countries
Fax +41 61 921 37 04
E-mail actuators@skf.com

SKF, Magnetic and Jaeger are registered trademarks of the SKF Group.

© SKF Group 2006
The contents of this publication are the copyright of the publisher and may not be reproduced (even extracts) unless prior written permission is granted. Every care has been taken to ensure the accuracy of the information contained in this publication but no liability can be accepted for any loss or damage whether direct, indirect or consequential arising out of the use of the information contained herein.

SKF

Publication **5322EN - 0609D** Printed in Sweden